WNK®

FIRST IN FOOD SERVICE

mg Hotel Supplies

MG HOTEL SUPPLIES QATAR

admin@mghotelsupplies.com

+971 56 199 8130

mg.supplies.uae

Finest Quality

silverware and tableware since 1955

Started in 1955, with over 70 years of manufacturing experience in finest quality silverware and tableware, WNK has grown to become a major international supplier in the food service industry. WNK offers a unique blend of family business traditions married to the use of the latest production methods and an excellent worldwide distribution and support network. Our company promises excellent products with a long service life, style and elegance to help promote your hospitality business.

We believe our products offer the best in quality and value. We have:

- Modern factories with over 10,000 square metres of production space employing 800 dedicated staff.
- In house mould shop, CNC and process machining.
- All raw materials imported from Finland and Japan ensuring first class base quality.
- Total quality control, a separated department operating on all part of the production processes.

Contents

Flatware

Flatware Collections P.12
Vavro's Collections P.40
Steak Knife P.50

Chafing Dish & Buffet

Chafing Dish P.52
Urn and Dispenser P.58
Buffet Display P.60
Buffet Accessories P.70

Tabletop

Wine Cooler and Accessories P.72
Ice Bucket P.74
Tray P.75
Cake Stand P.76
Container P.80
Plate Cover P.88
Table Accessories P.90

Hollowware

Crown Series P.102
Dream Series P.103
Eminence Series P.104
Diva Series P.106
Kent Series P.107
Kamina Series P.108
Royal and Supreme Series P.109

Chinese Tableware

PVD BLUE

PVD Copper Bronze

PVD Copper Bronze Matt

VINTAGE

Gun Metal

PVD GOLD

Gold Plated

PVD Dark Black

VANITY

18/10 | 5mm

VAN1/1	Table Knife (H.S.H.)	L24CM

VAN1/3	Table Spoon	L21.3CM

VAN1/7	Tea Spoon / US Tea Spoon	L15.1CM

VAN1/2	Table Fork	L21.8CM

ORCHID

18/10 | 3mm

ORC1/19	Table Knife (H.H.)	L24.1CM
ORC1/3	Table Spoon	L20.2CM
ORC1/6	Dessert Spoon	L18.8CM
ORC1/9	Soup Spoon	L17.8CM
ORC1/23	US Tea Spoon	L15.5CM
ORC1/5	Dessert Fork	L18.5CM

MONARCH

MON1/1	Table Knife (H.S.H.)	L24.2CM
MON1/4	Dessert Knife (H.S.H.)	L21CM
MON1/13	Steak Knife (H.S.H.)	L23.7CM
MON1/12	Butter Knife (H.S.H.)	L18.2CM
MON1/10	Fish Knife	L21CM
MON1/3	Table Spoon	L20.6CM
MON1/6	Dessert Spoon	L18.1CM
MON1/9	Soup Spoon	L17.7CM
MON1/18	Ice Tea Spoon	L18.9CM
MON1/7	Tea Spoon	L13.5CM
MON1/8	Coffee Spoon	L12.6CM
MON1/15	US Tea Spoon	L15.2CM
MON1/2	Table Fork	L21CM
MON1/5	Dessert Fork	L19.6CM
MON1/11	Fish Fork	L19.3CM
MON1/24	Cake Fork	L13.3CM

*Heavy Solid Handle (H.S.H.)

ZEN

ZEN1/1	Table Knife (H.S.H.) | standing	L24CM
OVO1/1	Table Knife (H.S.H.) | non-standing	L24.2CM
ZEN1/4	Dessert Knife (H.S.H.) | standing	L20.9CM
OVO1/4	Dessert Knife (H.S.H.) | non-standing	L21CM
ZEN1/13	Steak Knife (H.S.H.) | standing	L24.1CM
OVO1/13	Steak Knife (H.S.H.) | non-standing	L24.1CM
ZEN1/12	Butter Knife (H.S.H.) | standing	L18.2CM
OVO1/12	Butter Knife (H.S.H.) | non-standing	L18.1CM
ZEN1/10	Fish Knife	L20.6CM
ZEN1/3	Table Spoon	L20.8CM
ZEN1/6	Dessert Spoon	L19.3CM
ZEN1/9	Soup Spoon	L17.8CM
ZEN1/18	Ice Tea Spoon	L18.8CM
ZEN1/7	Tea Spoon	L13.1CM
ZEN1/8	Coffee Spoon	L11.5CM
ZEN1/15	US Tea Spoon	L15.2CM
ZEN1/2	Table Fork	L20.9CM
ZEN1/5	Dessert Fork	L19.4CM
ZEN1/11	Fish Fork	L19.5CM
ZEN1/24	Cake Fork	L13.7CM

*Heavy Solid Handle (H.S.H.)

HARLAN

18/10 | 7mm

HAR1/1	Table Knife (H.S.H.)	L23.2CM
HAR1/4	Dessert Knife (H.S.H.)	L20.3CM
HAR1/13	Steak Knife (H.S.H.)	L23.3CM
HAR1/12	Butter Knife (H.S.H.)	L18CM
HAR1/10	Fish Knife (H.S.H.)	L21.3CM
HAR1/3	Table Spoon	L20.1CM
HAR1/6	Dessert Spoon	L18.9CM
HAR1/9	Soup Spoon	L18.2CM
HAR1/14	Ice Tea Spoon	L19.1CM
HAR1/7	Tea Spoon	L14.1CM
HAR1/8	Coffee Spoon	L11.8CM
HAR1/21	US Tea Spoon	L14.9CM
HAR1/2	Table Fork	L19.8CM
HAR1/5	Dessert Fork	L18.7CM
HAR1/11	Fish Fork	L19.2CM
HAR1/15	Cake Fork *	L14.2CM

Heavy Solid Handle (H.S.H.)

OVATION

OVA1/1	Table Knife (H.S.H.) | standing	L24CM
OVA1/14	Table Knife (H.S.H.) | non-standing	L24.1CM
OVA1/4	Dessert Knife (H.S.H.) | standing	L20.8CM
OVA1/15	Dessert Knife (H.S.H.) | non-standing	L20.9CM
OVA1/13	Steak Knife (H.S.H.) | standing	L24.2CM
OVA1/17	Steak Knife (H.S.H.) | non-standing	L23.6CM
OVA1/12	Butter Knife (H.S.H.) | standing	L18.5CM
OVA1/16	Butter Knife (H.S.H.) | non-standing	L18.5CM
OVA1/10	Fish Knife	L20.9CM
OVA1/3	Table Spoon	L20.8CM
OVA1/6	Dessert Spoon	L19.4CM
OVA1/9	Soup Spoon	L18.2CM
OVA1/18	Ice Tea Spoon	L18.9CM
OVA1/7	Tea Spoon	L13.3CM
OVA1/8	Coffee Spoon	L12CM
OVA1/21	US Tea Spoon	L15.5CM
OVA1/2	Table Fork	L21.1CM
OVA1/5	Dessert Fork	L19.4CM
OVA1/11	Fish Fork	L19.5CM
OVA1/24	Cake Fork	L15.4CM

* Heavy Solid Handle (H.S.H.)

TUSCANY

TUS1/1	Table Knife (H.S.H.)	L24CM

TUS1/4	Dessert Knife (H.S.H.)	L20.8CM

TUS1/13	Steak Knife (H.S.H.)	L23.2CM

TUS1/12	Butter Knife (H.S.H.)	L18.6CM

TUS1/10	Fish Knife	L21.1CM

TUS1/3	Table Spoon	L20.5CM

TUS1/6	Dessert Spoon	L19CM

TUS1/9	Soup Spoon	L18.1CM

TUS1/14	Ice Tea Spoon	L18.8CM

TUS1/7	Tea Spoon	L13.5CM

TUS1/8	Coffee Spoon	L11.8CM

TUS1/21	US Tea Spoon	L15.5CM

TUS1/2	Table Fork	L20.9CM

TUS1/5	Dessert Fork	L19.3CM

TUS1/11	Fish Fork	L18.6CM

TUS1/15	Cake Fork	L15.5CM

*Heavy Solid Handle (H.S.H.)

FINITY

18/10 | 5mm

FIN1/1	Table Knife (H.S.H.)	L22.7CM
FIN1/4	Dessert Knife (H.S.H.)	L20.6CM
FIN1/14	Steak Knife (H.S.H.)	L22.5CM
FIN1/15	Butter Knife (H.S.H.)	L18CM
FIN1/13	Fish Knife (H.S.H.)	L21.4CM
FIN1/3	Table Spoon	L19.7CM
FIN1/6	Dessert Spoon	L18.4CM
FIN1/9	Soup Spoon	L17.9CM
FIN1/10	Ice Tea Spoon	L20.1CM
FIN1/7	Tea Spoon	L13.7CM
FIN1/8	Coffee Spoon	L11.4CM
FIN1/21	US Tea Spoon	L14.8CM
FIN1/2	Table Fork	L19.6CM
FIN1/5	Dessert Fork	L18.4CM
FIN1/12	Fish Fork	L18.9CM
FIN1/11	Cake Fork	L15CM

*Heavy Solid Handle (H.S.H.)

SPOOON

SPO1/1	Table Knife (H.S.H.)	L24CM

SPO1/4	Dessert Knife (H.S.H.)	L21CM

SPO1/13	Steak Knife (H.S.H.)	L24CM

SPO1/12	Butter Knife (H.S.H.)	L17.8CM

SPO1/10	Fish Knife	L20.8CM

SPO1/3	Table Spoon	L21.1CM

SPO1/6	Dessert Spoon	L19.4CM

SPO1/9	Soup Spoon	L17.8CM

SPO1/14	Ice Tea Spoon	L18.9CM

SPO1/7	Tea Spoon	L13.7CM

SPO1/8	Coffee Spoon	L11.9CM

SPO1/21	US Tea Spoon	L15.2CM

SPO1/2	Table Fork	L21.1CM

SPO1/5	Dessert Fork	L19.3CM

SPO1/11	Fish Fork	L18.1CM

SPO1/15	Cake Fork	L15.4CM

*Heavy Solid Handle (H.S.H.)

SILHOUETTE

SIL1/1	Table Knife (H.S.H.)	L23.8CM
SIL1/4	Dessert Knife (H.S.H.)	L20.6CM
SIL1/13	Steak Knife (H.S.H.)	L23CM
SIL1/10	Butter Knife (H.S.H.)	L18CM
SIL1/11	Fish Knife	L20.1CM
SIL1/3	Table Spoon	L20.8CM
SIL1/6	Dessert Spoon	L18.4CM
SIL1/9	Soup Spoon	L17.5CM
SIL1/14	Ice Tea Spoon	L18.7CM
SIL1/7	Tea Spoon	L14CM
SIL1/8	Coffee Spoon	L11.9CM
SIL1/2	Table Fork	L20.8CM
SIL1/5	Dessert Fork	L18.4CM
SIL1/12	Fish Fork	L18.4CM
SIL1/24	Cake Fork	L14.2CM

*Heavy Solid Handle (H.S.H.)

NOBLE

NOB1/1	Table Knife (H.S.H.)	L23.5CM
NOB1/4	Dessert Knife (H.S.H.)	L20.5CM
NOB1/13	Steak Knife (H.S.H.)	L23.7CM
NOB1/12	Butter Knife (H.S.H.)	L18.4CM
NOB1/3	Table Spoon	L20.8CM
NOB1/6	Dessert Spoon	L18.4CM
NOB1/9	Soup Spoon	L17.5CM
NOB1/18	Ice Tea Spoon	L18.9CM
NOB1/11	Tea Spoon	L14CM
NOB1/8	Coffee Spoon	L12.2CM
NOB1/21	US Tea Spoon	L15.6CM
NOB1/2	Table Fork	L20.8CM
NOB1/5	Dessert Fork	L18.4CM
NOB1/14	Fish Fork	L18.8CM
NOB1/24	Cake Fork	L14CM

*Heavy Solid Handle (H.S.H.)

WING

WNG1/1	Table Knife (H.S.H.)	L23.7CM
WNG1/4	Dessert Knife (H.S.H.)	L21.7CM
WNG1/13	Steak Knife (H.S.H.)	L23.9CM
WNG1/12	Butter Knife (H.S.H.)	L16.8CM
WNG1/10	Fish Knife	L21.5CM
WNG1/3	Table Spoon	L20.5CM
WNG1/6	Dessert Spoon	L19.1CM
WNG1/9	Soup Spoon	L18.2CM
WNG1/18	Ice Tea Spoon	L21CM
WNG1/7	Tea Spoon	L14.3CM
WNG1/8	Coffee Spoon	L11.5CM
WNG1/21	US Tea Spoon	L15.6CM
WNG1/2	Table Fork	L20.5CM
WNG1/5	Dessert Fork	L19CM
WNG1/11	Fish Fork	L19.5CM
WNG1/24	Cake Fork	L15CM

*Heavy Solid Handle (H.S.H.)

CANYON

CAN1/1	Table Knife (H.S.H.)	L23.5CM

CAN1/4	Dessert Knife (H.S.H.)	L20.7CM

CAN1/13	Steak Knife (H.S.H.)	L23.1CM

CAN1/14	Butter Knife (H.S.H)	L18.1CM

CAN1/10	Fish Knife	L21.1CM

CAN1/3	Table Spoon	L20.6CM

CAN1/6	Dessert Spoon	L18.8CM

CAN1/7	Soup Spoon	L18.2CM

CAN1/15	Ice Tea Spoon	L19.1CM

CAN1/8	Tea Spoon	L14.6CM

CAN1/9	Coffee Spoon	L11.1CM

CAN1/21	US Tea Spoon	L15CM

CAN1/2	Table Fork	L20.7CM

CAN1/5	Dessert Fork	L18.8CM

CAN1/11	Fish Fork	L18.6CM

CAN1/24	Cake Fork	L15.5CM

*Heavy Solid Handle (H.S.H.)

ALESSIA

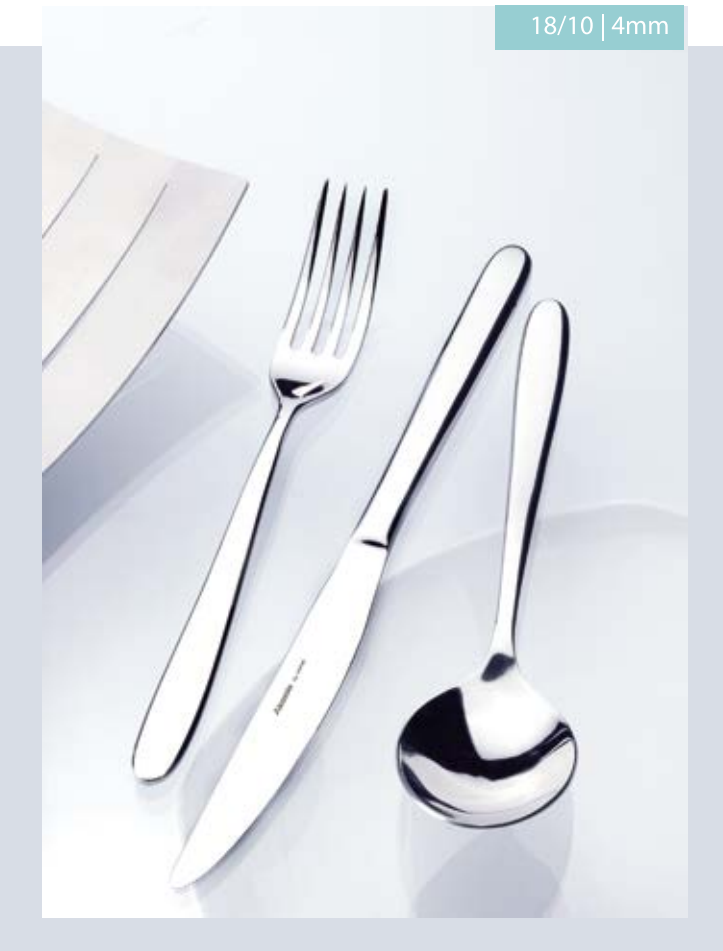

ALE1/1	Table Knife (H.S.H.)	L23.4CM

ALE1/4	Dessert Knife (H.S.H.)	L20CM

ALE1/11	Steak Knife (H.S.H.)	L22.6CM

ALE1/15	Butter Knife (H.S.H.)	L18CM

ALE1/10	Fish Knife	L18CM

ALE1/3	Table Spoon	L20.3CM

ALE1/6	Dessert Spoon	L17.4CM

ALE1/14	Soup Spoon	L16.9CM

ALE1/7	Tea Spoon	L13.6CM

ALE1/8	Coffee Spoon	L11.4CM

ALE1/2	Table Fork	L20.1CM

ALE1/5	Dessert Fork	L17.4CM

ALE1/9	Fish Fork	L17.4CM

ALE1/12	Cake Fork	L13.5CM

*Heavy Solid Handle (H.S.H.)

TULIP

TLP1/1	Table Knife (H.S.H.)	L23.3CM

TLP1/5	Dessert Knife (H.S.H.)	L20.1CM

TLP1/12	Steak Knife (H.S.H.)	L22.5CM

TLP1/13	Butter Knife (H.S.H.)	L18.3CM

TLP1/10	Fish Knife	L20CM

TLP1/3	Table Spoon	L20.1CM

TLP1/7	Dessert Spoon	L18.3CM

TLP1/8	Soup Spoon	L17.5CM

TLP1/14	Ice Tea Spoon	L19.4CM

TLP1/11	Tea Spoon	L13.9CM

TLP1/4	Coffee Spoon	L11.9CM

TLP1/2	Table Fork	L20CM

TLP1/6	Dessert Fork	L18.3CM

TLP1/9	Fish Fork	L18.5CM

TLP1/15	Cake Fork	L16.2CM

*Heavy Solid Handle (H.S.H.)

CHATSWORTH

18/10 | 4mm

CHA1/1	Table Knife (H.S.H.)	L23.5CM
CHA1/4	Dessert Knife (H.S.H.)	L20.7CM
CHA1/13	Steak Knife (H.S.H.)	L23.1CM
CHA1/14	Butter Knife (H.S.H.)	L18.1CM
CHA1/10	Fish Knife	L21.1CM
CHA1/3	Table Spoon	L20.6CM
CHA1/6	Dessert Spoon	L18.8CM
CHA1/7	Soup Spoon	L18.2CM
CHA1/15	Ice Tea Spoon	L19.1CM
CHA1/8	Tea Spoon	L14.6CM
CHA1/9	Coffee Spoon	L11.1CM
CHA1/21	US Tea Spoon	L15CM
CHA1/2	Table Fork	L20.7CM
CHA1/5	Dessert Fork	L18.8CM
CHA1/11	Fish Fork	L18.6CM
CHA1/24	Cake Fork	L15.5CM

*Heavy Solid Handle (H.S.H.)

TURA

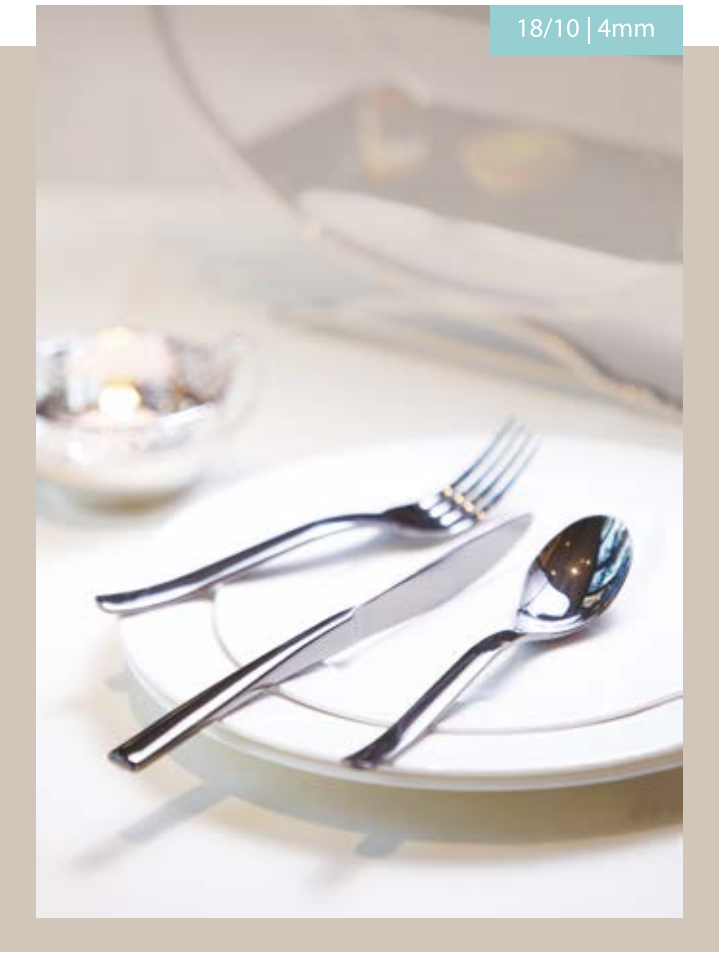

TURA1/1	Table Knife (H.S.H.)	L23.6CM
TURA1/19	Dessert Knife (H.S.H.)	L20.2CM
TURA1/27	Steak Knife (H.S.H.)	L24.3CM
TURA1/13	Butter Knife (H.S.H)	L18.1CM
TURA1/10	Fish Knife	L18.1CM
TURA1/3	Table Spoon	L19.8CM
TURA1/7	Dessert Spoon	L18.2CM
TURA1/8	Soup Spoon	L17.3CM
TURA1/14	Ice Tea Spoon	L18.5CM
TURA1/11	Tea Spoon	L13.5CM
TURA1/4	Coffee Spoon	L11.6CM
TURA1/21	US Tea Spoon	L14.9CM
TURA1/2	Table Fork	L19.9CM
TURA1/6	Dessert Fork	L18.3CM
TURA1/9	Fish Fork	L18.2CM
TURA1/15	Cake Fork	L13.7CM

*Heavy Solid Handle (H.S.H.)

ATLAS

18/10 | 3.5mm

ATL1/1	Table Knife (H.S.H.) | standing	L23CM

ATL1/4	Dessert Knife (H.S.H.) | standing	L20.9CM

ATL1/27	Steak Knife (H.S.H.)	L23CM

ATL1/14	Butter Knife (H.S.H.)	L18.5CM

ATL1/10	Fish Knife	L20.9CM

ATL1/3	Table Spoon	L20.3CM

ATL1/6	Dessert Spoon	L18.2CM

ATL1/7	Soup Spoon	L17.5CM

ATL1/11	Tea Spoon	L14.1CM

ATL1/12	Coffee Spoon	L12.3CM

ATL1/2	Table Fork	L19.9CM

ATL1/5	Dessert Fork	L18.1CM

ATL1/9	Fish Fork	L18.3CM

ATL1/15	Cake Fork	L14.8CM

*Heavy Solid Handle (H.S.H.)

KATO

HAMMERED FINISH

18/10 | 3mm

KHF1/1	Table Knife (H.S.H.)	L24.2CM

KHF1/4	Dessert Knife (H.S.H.)	L21.4CM

KHF1/15	Steak Knife (H.S.H.)	L24.2CM

KHF1/16	Butter Knife (H.S.H.)	L18.3CM

KHF1/10	Fish Knife	L20.1CM

KHF1/3	Table Spoon	L20.4CM

KHF1/6	Dessert Spoon	L17.3CM

KHF1/7	Tea Spoon	L14.4CM

KHF1/8	Coffee Spoon	L11.5CM

KHF1/11	Soup Spoon	L17.2CM

KHF1/12	Ice Tea Spoon	L19.1CM

KHF1/2	Table Fork	L21.3CM

KHF1/5	Dessert Fork	L18.1CM

KHF1/9	Fish Fork	L17.2CM

*Heavy Solid Handle (H.S.H.)

KATO

KAT1/1	Table Knife (H.S.H.)	L24.2CM
KAT1/4	Dessert Knife (H.S.H.)	L21.4CM
KAT1/15	Steak Knife (H.S.H.)	L24.2CM
KAT1/16	Butter Knife (H.S.H.)	L18.3CM
KAT1/10	Fish Knife	L20.1CM
KAT1/3	Table Spoon	L20.4CM
KAT1/6	Dessert Spoon	L17.3CM
KAT1/7	Tea Spoon	L14.4CM
KAT1/8	Coffee Spoon	L11.5CM
KAT1/11	Soup Spoon	L17.2CM
KAT1/12	Ice Tea Spoon	L19.1CM
KAT1/2	Table Fork	L21.3CM
KAT1/5	Dessert Fork	L18.1CM
KAT1/9	Fish Fork	L17.2CM

*Heavy Solid Handle (H.S.H.)

BAGUETTE

BAG1/18	Table Knife (H.S.H.) with line on handle	L23CM
BAG1/20	Dessert Knife (H.S.H.) with line on handle	L21.3CM
BAG1/27	Steak Knife (H.S.H.) with line on handle	L22.3CM
BAG1/31	Butter Knife (H.S.H.) with line on handle	L18.4CM
BAG1/7	Fish Knife	L19.7CM
BAG1/3	Table Spoon	L20.8CM
BAG1/6	Dessert Spoon	L18.5CM
BAG1/9	Soup Spoon	L17.8CM
BAG1/14	Ice Tea Spoon	L20.1CM
BAG1/11	Tea Spoon	L13.8CM
BAG1/12	Coffee Spoon	L11.2CM
BAG1/23	US Tea Spoon	L15.2CM
BAG1/2	Table Fork	L20.7CM
BAG1/5	Dessert Fork	L18.5CM
BAG1/8	Fish Fork	L18.2CM
BAG1/24	Cake Fork	L15.4CM

*Heavy Solid Handle (H.S.H.)

DELUXE

SAK1/1	Table Knife (S.H.)	L23.4CM
SAK1/3	Dessert Knife (S.H.)	L20.4CM
SAK1/17	Steak Knife (S.H.)	L21.3CM
SAK1/14	Butter Knife (S.H.)	L18.1CM
SAK1/6	Fish Knife	L20CM
SAK1/12	Table Spoon	L20CM
SAK1/4	Dessert Spoon	L17.9CM
SAK1/11	Soup Spoon	L17.3CM
SAK1/10	Ice Tea Spoon	L19.3CM
SAK1/9	Tea Spoon	L13.5CM
SAK1/13	Coffee Spoon	L11.6CM
SAK1/21	US Tea Spoon	L15.5CM
SAK1/2	Table Fork	L20CM
SAK1/5	Dessert Fork	L18.1CM
SAK1/7	Fish Fork	L17.8CM
SAK1/15	Cake Fork	L15.2CM

*Solid Handle (S.H.)

LEOPARDI

LEO1/1	Table Knife (H.S.H.)	L23.7CM
LEO1/5	Dessert Knife (H.S.H.)	L21.7CM
LEO1/27	Steak Knife (H.S.H.)	L21.7CM
LEO1/34	Butter Knife (H.S.H.)	L18.2CM
LEO1/10	Fish Knife	L21.3CM
LEO1/3	Table Spoon	L21CM
LEO1/7	Dessert Spoon	L18.8CM
LEO1/13	Soup Spoon	L17.5CM
LEO1/17	Ice Tea Spoon	L18.8CM
LEO1/11	Tea Spoon	L14CM
LEO1/12	Coffee Spoon	L11.7CM
LEO1/21	US Tea Spoon	L14.7CM
LEO1/2	Table Fork	L20.7CM
LEO1/6	Dessert Fork	L18.9CM
LEO1/9	Fish Fork	L18.6CM
LEO1/16	Cake Fork	L15CM

*Heavy Solid Handle (H.S.H.)

ECLIPSE

ECL1/1	Table Knife (H.S.H.)	L23.4CM
ECL1/4	Dessert Knife (H.S.H.)	L20.8CM
ECL1/14	Butter Knife (H.S.H.)	L18.1CM
ECL1/7	Fish Knife	L19.6CM
ECL1/3	Table Spoon	L19.8CM
ECL1/6	Dessert Spoon	L17.9CM
ECL1/9	Soup Spoon	L17.2CM
ECL1/10	Ice Tea Spoon	L18.5CM
ECL1/11	Tea Spoon	L13.8CM
ECL1/12	Coffee Spoon	L11.8CM
ECL1/21	US Tea Spoon	L14.7CM
ECL1/2	Table Fork	L20.3CM
ECL1/5	Dessert Fork	L18.4CM
ECL1/8	Fish Fork	L18CM
ECL1/25	Cake Fork	L15.2CM

*Heavy Solid Handle (H.S.H.)

PLAZA

PLA1/1	Table Knife (H.S.H)	L22.7CM
PLA1/5	Dessert Knife (H.S.H)	L20.6CM
PLA1/13	Steak Knife (H.S.H)	L21.6CM
PLA1/10	Butter Knife (H.S.H)	L16.8CM
PLA1/17	Fish Knife	L21.5CM
PLA1/3	Table Spoon	L20.5CM
PLA1/7	Dessert Spoon	L18.6CM
PLA1/8	Soup Spoon	L18.4CM
PLA1/14	Ice Tea Spoon	L20.1CM
PLA1/11	Tea Spoon	L13.7CM
PLA1/12	Coffee Spoon	L11.6CM
PLA1/2	Table Fork	L20.7CM
PLA1/6	Dessert Fork	L18.4CM
PLA1/16	Fish Fork	L18.9CM
PLA1/15	Cake Fork	L14.1CM

*Heavy Solid Handle (H.S.H.)

EVERTZ

EVE1/1	Table Knife (H.S.H.)	L21.4CM

EVE1/5	Dessert Knife (H.S.H.)	L19.8CM

EVE1/13	Steak Knife (H.S.H.)	L22CM

EVE1/17	Butter Knife (H.S.H.)	L18.1CM

EVE1/10	Fish Knife	L19.5CM

EVE1/3	Table Spoon	L19.5CM

EVE1/7	Dessert Spoon	L17.4CM

EVE1/8	Soup Spoon	L16.5CM

EVE1/14	Ice Tea Spoon	L18.5CM

EVE1/11	Tea Spoon	L13.6CM

EVE1/12	Coffee Spoon	L11.2CM

EVE1/2	Table Fork	L19.5CM

EVE1/6	Dessert Fork	L17.1CM

EVE1/9	Fish Fork	L17.1CM

EVE1/30	Cake Fork	L15CM

*Heavy Solid Handle (H.S.H.)

CONTOUR

COR1/1	Table Knife (H.S.H.)	L23.4CM

COR1/5	Dessert Knife (H.S.H.)	L20.4CM

COR1/13	Steak Knife (H.S.H.)	L22.7CM

COR1/10	Fish Knife	L18.4CM

COR1/3	Table Spoon	L21CM

COR1/7	Dessert Spoon	L18.4CM

COR1/11	Tea Spoon	L13.8CM

COR1/12	Coffee Spoon	L10.9CM

COR1/2	Table Fork	L20.9CM

COR1/6	Dessert Fork	L18.5CM

COR1/9	Fish Fork	L18.4CM

*Heavy Solid Handle (H.S.H.)

WINDSOR

18/10 | 3mm

WIN1/1	Table Knife (S.H.)	L23.2CM

WIN1/4	Dessert Knife (S.H.)	L20.2CM

WIN1/17	Steak Knife (S.H.)	L21.2CM

WIN1/10	Butter Knife (S.H.)	L18.1CM

WIN1/7	Fish Knife	L21.3CM

WIN1/3	Table Spoon	L19.6CM

WIN1/6	Dessert Spoon	L17.4CM

WIN1/9	Soup Spoon	L16.7CM

WIN1/14	Ice Tea Spoon	L18.6CM

WIN1/11	Tea Spoon	L13.8CM

WIN1/12	Coffee Spoon	L11.9CM

WIN1/21	US Tea Spoon	L15.3CM

WIN1/2	Table Fork	L19.8CM

WIN1/5	Dessert Fork	L17.5CM

WIN1/8	Fish Fork	L17.3CM

WIN1/15	Cake Fork	L15.5CM

*Solid Handle (S.H.)

A Design Aesthetic

Revered In The World's Leading Hotels and Restaurants

LEADING DESIGNERS

Alain and Dominique Vavro live in the delightful French village of Collonges au Mont d'Or close to Lyon on the banks of the River Seine. Whilst tiny, the village is renowned around the world as home of legendary gastronomer, Paul Bocuse's Michelin-starred restaurant, l'Auberge du Pont de Collonges. It was here that the Vavro's first began to make a name for themselves and their tableware.

Over the years, Alain and Dominique have created many outstanding crockery and cutlery collections which now grace the tables of leading hotels and restaurants across Europe and the Middle East. In specially designing four sets of flatware for WNK, the Vavros are taking their creative flair to an entirely new level.

follows the image of current lifestyles but is inspired, for the knife in particular, from blades forged by primitive peoples. Its authentic simplicity makes it a warm and friendly choice. Its intuitive design links traditional character and futuristic lines.

à l'image de l'art de vivre actuel, mais inspiré pour le couteau notamment, des lames forgées des peuplades primitives. Sa simplicité authentique en fait une gamme conviviale. Son design intuitif est le lien entre caractère de tradition et ligne d'avenir.

Gamme Alba

18/10 | 5mm

ALB1/1	Table Knife (H.S.H.)	L23.5CM
ALB1/4	Dessert Knife (H.S.H.)	L20.6CM
ALB1/13	Steak Knife (H.S.H.)	L23.6CM
ALB1/12	Butter Knife (H.S.H.)	L17.9CM
ALB1/10	Fish Knife	L20.5CM
ALB1/3	Table Spoon	L20.7CM
ALB1/6	Dessert Spoon	L19.2CM
ALB1/9	Soup Spoon	L17.8CM
ALB1/18	Ice Tea Spoon	L19CM
ALB1/7	Tea Spoon	L14CM
ALB1/8	Coffee Spoon	L12.2CM
ALB1/15	US Tea Spoon	L15.2CM
ALB1/2	Table Fork	L20.5CM
ALB1/5	Dessert Fork	L19.1CM
ALB1/11	Fish Fork	L19CM
ALB1/24	Cake Fork	L14.3CM

*Heavy Solid Handle (H.S.H.)

VAVRO.

tells a story... The movement of its rounded lines evokes positive and energetic values with a knowing wink at Baguette, the great classic, which has been used for over a century. This vigorous, streamlined and generous style adds a touch of timeless balance to tableware.

nous raconte une histoire... Le mouvement de ses lignes rondes évoque des valeurs positives et énergisantes en clin d'oeil au grand classique "Baguette", utilisé depuis plus d'un siècle. Ce style vigoureux, épuré et généreux confère aux couverts une touche d'équilibre intemporel.

Gamme Java

18/10 | 4mm

JAV1/1	Table Knife (H.S.H.)	L24CM

JAV1/4	Dessert Knife (H.S.H.)	L21.3CM

JAV1/13	Steak Knife (H.S.H.)	L24CM

JAV1/12	Butter Knife (H.S.H.)	L18CM

JAV1/10	Fish Knife (H.S.H.)	L20.7CM

JAV1/3	Table Spoon	L21.2CM

JAV1/6	Dessert Spoon	L19.5CM

JAV1/9	Soup Spoon	L17.7CM

JAV1/18	Ice Tea Spoon	L18.9CM

JAV1/7	Tea Spoon	L13.9CM

JAV1/8	Coffee Spoon	L12CM

JAV1/15	US Tea Spoon	L15.1CM

JAV1/2	Table Fork	L21.2CM

JAV1/5	Dessert Fork	L19.5CM

JAV1/11	Fish Fork	L19.6CM

JAV1/24	Cake Fork	L14.3CM

*Heavy Solid Handle (H.S.H.)

Our design is oriented toward a search for a simplified and graphically pure shape. Cutlery is restrained and fits in with the concepts of a cuisine that is contemporary, fresh and creative. The broad flat area on the handles enables getting a firm grip on the cutlery.

Notre design s'est axé sur la recherche d'une ligne simplifiée, graphique et épurée. Les couverts, stricts, s'inscrivent en accord avec les concepts de cuisine contemporaine, actuelle, et créative. Le large plat des manches contribue à une bonne préhension des couverts.

Gamme Nemo

18/10 | 4mm

NEM2/1	Table Knife (H.S.H.)	L23.7CM
NEM2/4	Dessert Knife (H.S.H.)	L21CM
NEM2/13	Steak Knife (H.S.H.)	L23.7CM
NEM2/12	Butter Knife (H.S.H.)	L18.4CM
NEM2/10	Fish Knife	L20.5CM
NEM1/3	Table Spoon	L21.3CM
NEM1/6	Dessert Spoon	L18.9CM
NEM1/9	Soup Spoon	L18.1CM
NEM1/18	Ice Tea Spoon	L18.9CM
NEM1/7	Tea Spoon	L14CM
NEM1/8	Coffee Spoon	L12.2CM
NEM1/15	US Tea Spoon	L15.6CM
NEM1/2	Table Fork	L21.3CM
NEM1/5	Dessert Fork	L18.9CM
NEM1/11	Fish Fork	L18.8CM
NEM1/24	Cake Fork	L15.7CM

*Heavy Solid Handle (H.S.H.)

Our aim here was to imagine the design of a playful and timeless line. The energetic, flowing curves of the tableware suggest a cuisine that is eclectic, living and without frontiers. Elongated handles on the cutlery provide comfortable, easy use.

Notre volonté était ici d'imaginer le design d'une ligne ludique et intemporelle. Les couverts aux courbes fluides et énergiques induisent la notion d'une cuisine éclectique, vivante, et sans frontière. Les manches des couverts aux formes allongées sont adaptés au confort de l'utilisation.

Gamme Togo

18/10 | 5mm

TOG1/1	Table Knife (H.S.H.)	L24CM
TOG1/4	Dessert Knife (H.S.H.)	L21.2CM
TOG1/13	Steak Knife (H.S.H.)	L24.2CM
TOG1/12	Butter Knife (H.S.H.)	L18CM
TOG1/10	Fish Knife	L20.8CM
TOG1/3	Table Spoon	L21.3CM
TOG1/6	Dessert Spoon	L19CM
TOG1/9	Soup Spoon	L18.7CM
TOG1/18	Ice Tea Spoon	L18.9CM
TOG1/7	Tea Spoon / US Tea Spoon	L15.1CM
TOG1/8	Coffee Spoon	L11.9CM
TOG1/2	Table Fork	L21.8CM
TOG1/5	Dessert Fork	L19.4CM
TOG1/11	Fish Fork	L19CM
TOG1/24	Cake Fork	L15.6CM

*Heavy Solid Handle (H.S.H.)

Steak Knife With Pakkawood Handle

BH43121
Box for Steak Knife
L31.5 x W21.5 x H5cm

SK113
L24cm
AVAILABLE HANDLE COLORS:

1 SK113-P (pistache)

2 SK113-B (black)

3 SK113-O (olive)

Diva INDUCTION CHAFING DISH

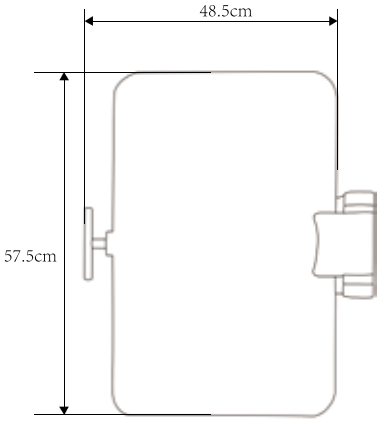

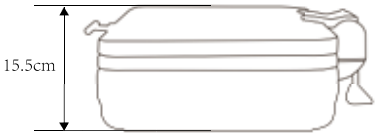

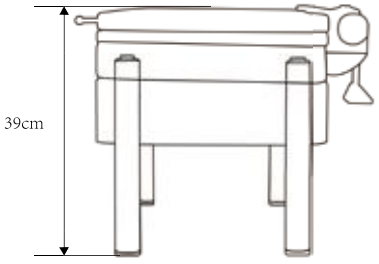

CD611
Induction Chafing Dish, GN1/1
L57.5 x W48.5 x H15.5cm, capacity: 7.5L

CD611G
Induction Chafing Dish, GN1/1 (glass lid)
L57.5 x W48.5 x H15.5cm, capacity: 7.5L

CD412
Stainless Steel GN1/2 Insert
L26.5 x W32.5 x H7cm
Capacity: 3.5L

CD422
Stainless Steel GN1/1 Insert
L52.6 x W32.3 x H7cm
Capacity: 7.5L

CD212
Porcelain GN1/2 Insert
L25.2 x W32.5 x H6.5cm
Capacity: 2.5L

CD201
Porcelain GN1/1 Insert
L53 x W32.5 x H6.5cm
Capacity: 8L

CD611ER
Stackable Stand for CD611 - Including 2pcs Magnetic Wind Block CD225 & 2pcs Burner Holder CD222L
L67 x W37.5 x H27.7cm

Color Options:

(PVD BLACK)

(PVD BLACK)

(PVD COPPER BRONZE)

(PVD GOLD)

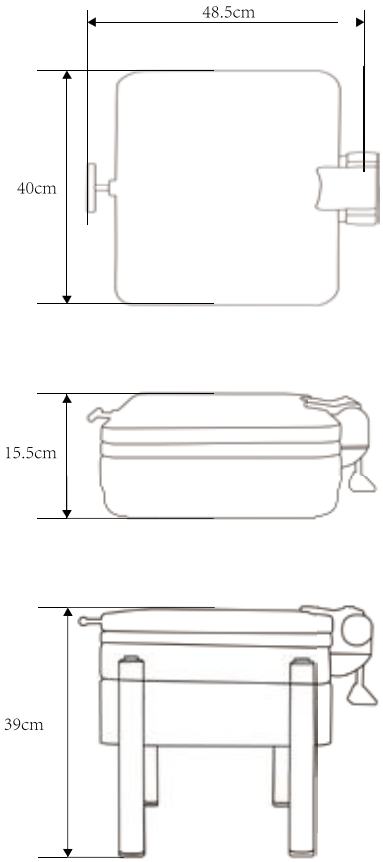

CD623
Induction Chafing Dish, GN2/3
L40 x W48.5 x H15.5cm, capacity: 6.5L

CD623G
Induction Chafing Dish, GN2/3 (glass lid)
L40 x W48.5 x H15.5cm, capacity: 6.5L

CD623FP
Stainless Steel GN2/3 Insert
L35.5 x W32.3 x H9cm
Capacity: 6.5L

CD623POR
Porcelain GN2/3 Insert
L35.5 x W32 x H6.5cm
Capacity: 4.3L

CD623ER
Stackable Stand for CD623 - Including Magnetic Wind Block CD225 & Burner Holder CD222L
L48 x W38.5 x H27.5cm

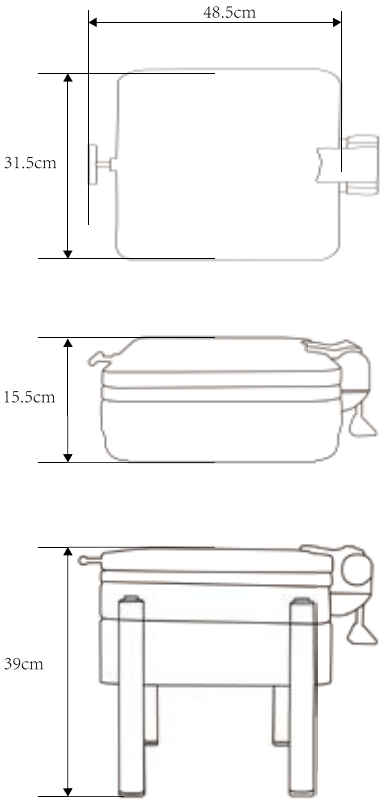

CD612
Induction Chafing Dish, GN1/2
L31.5 x W48.5 x H15.5cm, capacity: 3.5L

CD612G
Induction Chafing Dish, GN1/2 (glass lid)
L31.5 x W48.5 x H15.5cm, capacity: 3.5L

CD412
Stainless Steel GN1/2 Insert
L26.5 x W32.5 x H7cm
Capacity: 3.5L

CD212
Porcelain GN1/2 Insert
L25.2 x W32.5 x H6.5cm
Capacity: 2.5L

CD612ER
Stackable Stand for CD612 - Including Magnetic Wind Block CD225 & Burner Holder CD222L
L37.5 x W31.5 x H27cm

CD601
Round Induction Chafing Dish
L37 x W48 x H15.5cm, capacity: 5.3L

CD601FP
Stainless Steel Round Insert
dia.32.5 x H8.5cm, capacity: 5.3L

CD601ER
Stackable Stand for CD601 & CD09811L - Including Magnetic Wind Block CD225 & Burner Holder CD222L
dia.37.5 x H27.5cm

CD602
Round Induction Chafing Dish
L44.5 x W55.5 x H15.5cm, capacity: 6.5L

CD418
Stainless Steel Round Insert
dia.38.5 x H7.7cm, capacity: 6.5L

CD602ER
Stackable Stand for CD602 - Including Magnetic Wind Block CD225 & Burner Holder CD222L
dia.45 x H27.5cm

CD601G
Round Induction Chafing Dish
L37 x W48 x H15.5cm, capacity: 5.3L

CD601POR
Porcelain Round Insert
dia.32.5 x H6.5cm, capacity: 3L

CD601PORDIV
Porcelain Round Insert with Divider
dia.32.5 x H6.5cm, capacity: 3L

CD602G
Round Induction Chafing Dish
L44.5 x W55.5 x H15.5cm, capacity: 6.5L

CD211
Porcelain Round Insert
dia.39 x H5cm, capacity: 4L

CD211DIV
Porcelain Round Insert with Divider
dia.39 x H6.3cm, capacity: 4L

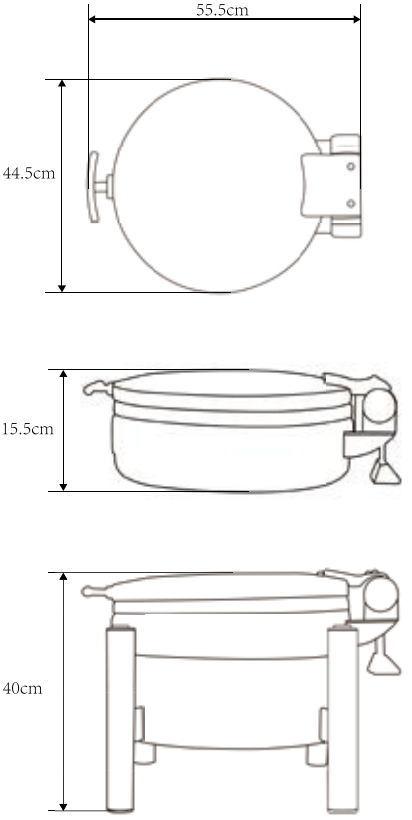

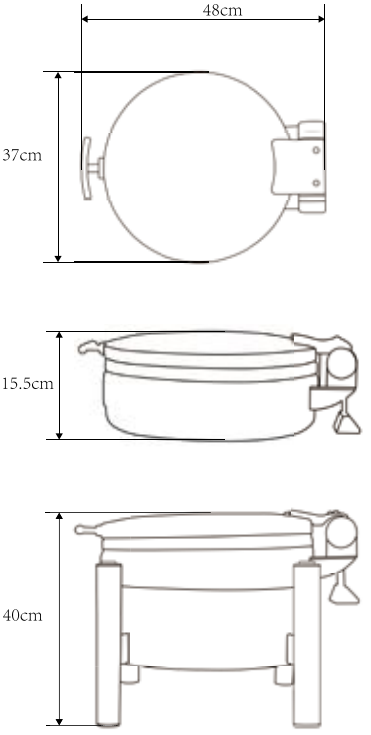

Color Options:

(PVD GOLD)

(PVD MATT BLACK)

(PVD BLUE)

CE

BTJ20
Induction cooker
220V, 60Hz, 500-2000W
L45 x W38 x H7.6cm
Euro Plug

CD255
Magnetic Wind Block
L21.3 x W13.5x H9.1cm

CD222L
Burner Holder
dia.9.2 x H6.1cm

CT12070
Chafing Dish Trolley
L120 x W70 x H150cm

CE

Electric Heater
without / with temp. control
CD1333EURO / CD1433EURO
220V, 50 Hz, 250W
L18.5 x W19.8cm x H6cm
Euro Plug
*different countries electric plugs available upon request

CE

Electric Heater
without / with temp. control
EH110EURO / EHT110EURO
220V, 50 Hz, 350W
dia.11 x H11cm
Euro Plug
*different countries electric plugs available upon request

Roll Top Chafing Dish

Stackable Design

CD451
Oblong Roll Top Chafing Dish (stackable)
L68.5 x W54.5 x H48cm, capacuty: 7.5L

CD452
Oblong Roll Top Soup Station (stackable)
L68.5 x W54.5 x H48cm, capacuty: 7L

CD453
Round Roll Top Chafing Dish (stackable)
L53 x W53.5 x H51cm, capacity: 6.5L

Can match with chafing dish trolley CT12070 for easy storage and transportation

CT12070
Chafing Dish Trolley
L120 x W70 x H150cm

CD458
Round Roll Top Soup Station (stackable)
L53 x W53.5 x H51cm, capacity: 3.5L

CD252B (brass legs) | CD252C (chromic legs)
Oblong Roll Top Soup Station
L68.5 x W51 x H43.5cm, capacity: 7L

CD251B (brass legs) | CD251C (chromic legs)
Oblong Roll Top Chafing Dish
L68.5 x W51 x H43.5cm, capacity: 7.5L

CD258B (bross legs) | CD258C (chromic legs)
Round Roll Top Soup Station
L53 x W53 x H44cm, capacity: 3.5L

CD253B (bross legs) | CD253C (chromic legs)
Round Roll Top Chafing Dish
L53 x W53 x H44cm,capacity: 6.5L

Brass legs (B)

Chromic legs (C)

ACCESSORIES

CD419
Round Water Pan
L43 x W42.7 x H10.5cm

CD418
Stainless Steel Round Insert
dia.38.5 x H7.7cm, capacity: 6.5L

CD420
Oblong Water Pan
L58.5 x W37.7 x H11.5cm

CD422
Oblong Insert
L52.6 x W32.3 x H7cm, capacity 7.5L

CD410
Round Soup Station Lid
dia.38.3cm x H5.3cm

CD408
Soup Bucket
dia.23.3 x H22.3cm, capacity: 3.5L

CD412
Stainless Steel GN1/2 Insert
L32.5 x W26.5 x H7cm, capacity: 3.5L

CD416
Oblong Soup Station Lid
L51.2 x W32.9 x H4.9cm

CD211DIV
Porcelain Round Insert with Divider
dia.39.5 x H6.3cm, capacity: 4L

CD211
Porcelain Round Insert
dia.39.5 x H5cm capacity: 4L

CD212
Porcelain GN1/2 Insert
L32.5 x W25 x H6.5cm, capacity: 2.5L

CD201
Porcelain GN1/1 Insert
L52.5 x W32 x H6.5cm, capacity: 8L

Burner Holder
CD222L
dia.9.2 x H6.1cm

CE
Electric Heater (for round chafers)
without / with temp. control
CD424EURO / CD434EURO
L18.5 x W19.8cm x H6cm, 250W
Euro Plug
*different countries electric plugs available upon request

CE
Electric Heater (for oblong chafers)
without / with temp. control
CD324EURO / CD334EURO
L32 x W20 x H2cm, 350W
Euro Plug
*different countries electric plugs available upon request

CD313
Porcelain GN1/3 Insert
L32.5 x W17.5 x H6.5cm, capacity: 1.5L

Soup And Sauce Station

CD0988L
Induction Soup Station
dia.34 x H31cm
capacity: 8L

CD198RNS
Stackable stand with Burner Holder
dia.33.5 x H21cm

CD099
Sauce Station
dia.19 x H25.5cm
capacity: 1.3L

NEW

CD698G
Induction Soup Station-Glass Lid
dia.37 x H28cm
capacity: 11L

NEW

CD698ER
Stackable Stand for CD698 - Including Magnetic Wind Block CD225 & Burner Holder CD222L
dia.45 x H20.5cm

CE
Electric Heater
without / with temp. control
CD1333EURO / CD1433EURO
220V, 50 Hz, 250W
L18.5 x W19.8cm x H6cm
Euro Plug
*different countries electric plugs available upon request

CD222L
Burner Holder
dia.9.2 x H6.1cm

URN AND DISPENSER

NCR023
Double Wall Coffee Urn
L36 x W42 x H58cm, capacity: 12L

Single Wall Coffee Urn
NCR11L
L35 x W34 x H55cm, capacity: 11L
NCR024-PM
L36 x W42 x H59cm, capacity: 17L

NCR5L
Single Wall Coffee Urn
L27 x W28 x H46cm, capacity: 5L

CE
Electric Heater for Single Wall Coffee Urn
without / with temp. control
EH110EURO / EHT110EURO
220V, 50 Hz, 350W
dia.11 x H11cm
*different countries electric plugs available upon request

NEW

MD001
Single Milk Dispenser
L23.5 x W36.5 x H44.5cm, capacity: 5L

MD001W
Single Milk Dispenser
L23 x W23 x H45.5cm, capacity: 5L

JD015
Single Juice Dispenser
L23.5 x W36.5 x H50cm, capacity: 5L

NEW

JD015W
Single Juice Dispenser
L23 x W23 x H52cm, capacity: 5L

Juice Chiller (double wall)
RJC002BASE (base) | FP13 (bottle)
dia.27 x H16cm | capacity1.3L

Juice Chiller (double wall)
RJC003BASE (base) | FP13 (bottle)
dia.27 x 16cm | capacity1.3L

NEW

Juice Chiller(wooden base)
RJC42919 (base) | FP13 (bottle)
dia.29.6 x 19.5cm | capacity1.3L

CED001
Single Cereal Dispenser
L25 x W34 x H67cm, capacity: 7L

CED002
Double Cereal Dispenser
L43.5 x W34 x H67cm, capacity: 7L per urn

Buffet Display

SJ62110
Buffet Stand
Dia21×H10.5cm

SJ62120
Buffet Stand
Dia21×H20cm

SJ61819
Candle Holder (without candles)
Dia18.5×H19.5cm

1

BRC5025
Buffet Riser-Half Cylinder
Dia50 × H25cm

2

BRQ2520
Buffet Riser-Quadrilateral
L50 × L25 × W22 × H20cm

3

BRHC2515
Buffet Riser-Hexagonal Prism
L50 × L25 × W43 × H15cm

SJ63032
Bowl Riser (not including bowl)
Dia30×H32.5cm

SJ61514
Bowl Riser (not including bowl)
Dia15×H14.5cm

SJ62022
Bowl Riser (not including bowl)
Dia20×H22.7cm

SJ63930
Bowl Riser (not including bowl)
Dia39.5×H30cm

4

BRHC2510
Buffet Riser-Hexagonal Prism
L50 × L25 × W40 × H10cm

5

BRH2510
Buffet Riser-Hexagonal Prism
L50 × L25 × W43 × H10cm

6

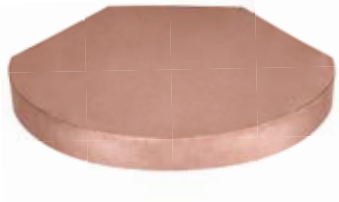

BRH255
Buffet Riser-Hexagonal Prism
L50 × L25 × W43 × H5cm

NEW

OS001SET
Oyster Stand (including glass bowls)
dia.34.5 x H23cm

HR024WOSH
3 Tiers Seafood Stand (Without Sauce Bowl Holders)
dia.31x H41cm

RCT5842T
Rectangular Tray with Stand
tray: L58 x W42.3cm, stand: L35 x W24 x H10cm

Porcelain GN Holder (not including porcelain insert)

GNH11105 (for CD201) L56 x W34.2 x H10.5cm	GNH11150 (for CD201) L56 x W34.2 x H15cm
GNH12105 (for CD212) L35.3 x W28.6 x H10.5cm	GNH12150 (for CD212) L35.3 x W28.6 x H15cm

Porcelain Round Holder (not including porcelain insert)

GNH211 (for CD211) dia.42 x H10.5cm	GNH211H (for CD211) dia.42 x H15cm

Square Stand

RFSSMALL	RFSMEDIUM	RFSLARGE
L25.5 x W25.5 x H22cm	L28 x W28 x H18.5cm	L35 x W35 x H14cm

Round Buffet Stand
MH1115S
dia.14 x H6cm
MH1115H
dia.14 x H10.5cm

Square Buffet Stand
MH1510S
L15 x W15 x H6cm
MH1510H
L15 x W15 x H10.5cm

GH1413
Triangular Buffet Stand
L14 x W12 x H6.1cm

GH1005
Rectangular Buffet Stand
L11 x W6 x H4cm

GH1010
Square Buffet Stand
L10 x W10 x H6.2cm

GH0810
Square Buffet Stand
L8 x W8 x H10cm

Round Wooden Riser

ZJ53620	ZJ52815	ZJ51810
L36×H20cm	L28×H15cm	L18×H10cm

Square Wooden Riser

ZJ42519	ZJ42014	ZJ41410
L25.1×H19.8cm	L20×H14.8cm	L14.8×H10cm

Serving Stand

GJ42015	GJ42010	GJ42005
L20×W20×H15cm	L20×W20×H10cm	L20×W20×H5cm

Truffle Display

ZJ41718 (base)	ZJ01415 (glass)
L17×H18cm	L14.8×H15cm

Three-Step Wooden Riser

ZJ14220	ZJ13620	ZJ13020
L42.5×W20×H12cm	L36×W20×H9cm	L30×W20×H3cm

1

ZJ42525
Buffet Display
L25×W25×H25cm

2

ZJ42418
Buffet Display
L24.2×W18.1×H5cm

3

TP43017
Wooden Steak Board
L29.9×W17.6×H2cm

4

TP43018
Wooden Steak Board
L29.4×W17.7×H2cm

5

ZJ42515
Buffet Display
L25×W18.8×H15cm

6

ZJ42518
Buffet Display
L24.9×W18.5×H10cm

7

TP43020
Wooden Steak Board
L30.5×W20×H2cm

8

TP43120
Wooden Steak Board
L30.5×W20×H2cm

ST44518
Serving Board
L45×W18×H2cm

ST43816
Serving Board
L38×W16×H2cm

ST43512
Serving Board
L35×W12×H2cm

ST43520
Serving Board
L35×W20×H2cm

ST44028
Serving Board
L40×W28×H2cm

ST42232
Serving Board
L22×W32×H2cm

NEW

Green Marble Plinth
ZJ84102
L37.7×W17.7×H1.8CM

Pink Marble Plinth
ZJ84101
L37.7×W17.7×H1.5CM

Natural Slate Board
RS371707
L37.7×W17.7×H0.7CM

Walnut Wood Box
WB4004
L40×W20×H7.7CM
WB402
L40×W20×H7.7CM

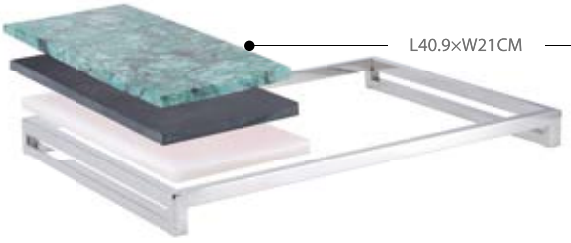

L40.9×W21CM

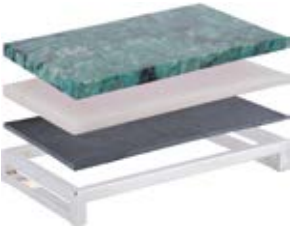

L31×W31CM

Buffet Riser
DS614105
L61.2×W41×H5CM

Buffet Riser
DS412105
L41.1×W21.2×H5CM

Buffet Riser
DS313105
L31×W31×H5CM

Buffet Riser
DS614110
L61.2×W41×H10CM

Buffet Riser
DS412110
L41.1×W21.2×H10CM

Buffet Riser
DS313110
L31×W31×H10CM

Buffet Riser
DS614115
L61.2×W41×H15CM

Buffet Riser
DS412115
L41.1×W21.2×H15CM

Buffet Riser
DS313115
L31×W31×H15CM

Buffet Riser
DS614120
L61.2×W41×H20CM

ZJ25204
Wooden Tray
L52.8×W32×H4CM

ZJ25731
2-Tier Wooden Stand
L57×W31×H45.7CM

MK24828
Pastry & Bread Display
L48×W28×H16.5cm

MK24030
Pastry & Bread Display
L40×W30×H6.5cm

ZJ25232
Sushi & Cheese Display
L52.5×W32.5×H7.3cm

MK23060
Pastry & Bread Display
L30×W30×H5.8cm

Functional Service Trolley
CZ49943
-1 retractable serving shelf: L35×W43cm
L99×W43×H86cm

ZJ42314
Stackable Bakery Box with Acrylic Drawer
L22.8 x W13.9 x H14.5cm

ZJ42303
Wooden Stand
L22.8 x W13.9 x H3.2cm

Functional Service Trolley
CZ49950
-1 retractable serving shelf: L35×W35cm
L99×W50×H89cm

Functional Service Trolley
CZ46553
-1 retractable serving shelf: L34.7×W34.7cm
L65×W53×H90cm

AVAILABLE COLORS:

CLEAR / BLACK

1

SR1530
Square Multi-Level Riser
L15.2 x W15.2 x H33.6cm

2

SR1850
Square Multi-Level Riser
L18 x W18 x H50cm

3

SR2070
Square Multi-Level Riser
L20 x W20 x H70cm

4

RR1730
Round Multi-Level Riser
dia.17.5 x H31.2cm

5

Octagon Display Stand
ODS3012
L30 x W30 x H12cm

6

ODS3024
Octagon Display Stand
L30 x W30 x H24cm

ODS3536
Octagon Display Stand
L35 x W35 x H36cm

Round Surface(clear)
ROSSC (glass)| ROSSAC (acrylic)
Round Surface(black)
ROSSB (glass) | ROSSAB (acrylic)
dia.35.5 x H1cm

Round Surface(clear)
ROSLC (glass) | ROSLAC (acrylic)
Rectangular Surface(black)
ROSLB (glass) | ROSLAB (acrylic)
dia.50.5 x H1cm

Narrow Rectangular Surface(clear)
RSNC (glass) | RSNAC (acrylic)
Narrow Rectangular Surface(black)
RSNB (glass) | RSNAB (acrylic)
L85 x W19.5 x H1cm

Rectangular Surface(clear)
RSC (glass) | RSAC (acrylic)
Rectangular Surface(black)
RSB (glass) | RSAB (acrylic)
L85 x W35.5 x H1cm

Square Surface(clear)
SSC (glass) | SSAC (acrylic)
Square Surface(black)
SSB (glass) | SSAB (acrylic)
L35.5 x W35.5 x H1cm

RDS6938
Rectangular Display Stand
L69.5 x W38 x H18.5cm

1 **Wooden Bowl**

SD43021	SD42719	SD42417	SD42215
L30×H21cm	L27×H19cm	L24×H17cm	L22×H15cm

2 SD42305
Bowl Stand (base)
L23×H4.5cm

Buffet Stand

MH017S	MH017M	MH017L
dia.17.9 x H14.8cm	dia.17.9 x H19.4cm	dia.17.9 x H26.6cm

Slip Round Bowl

SRB12	SRB15	SRB20	SRB24
dia.12.5 x H10.1cm	dia.16 x H12.5cm	dia.22 x H17cm	dia.24 x H17cm

Wooden Riser

ZJ42018	ZJ42729	ZJ43138
L20.2×H18cm	L27.4×H29cm	L31.4×H38cm

AVAILABLE COLORS:

RED ORANGE YELLOW GREEN BLACK

Round Buffet Stand
MH025
dia.25 x H12.5cm
MH028
dia.28 x H23cm

Food Holder

LB0910	PW593
upper layer: dia.24cm	upper layer: dia.19cm
lower layer: dia.26.8cm	lower layer: dia.28cm
height: 18cm	height: 20cm

ZJ43008
Fruit Holder
dia.8.6×H30.5cm

Buffet Accessories

NEW

HR002
Bread Tong
L22.5cm

BT235
Bread Tong
L23.5cm

BT235F
Bread Tong
L23.5cm

BT240
Service Tong
L24cm

Buffet Tong

BT235S	BT169
L23.5cm	L27cm

PP180
Pastry Pliers
L18 x W7 x H3.7cm

Tasting Spoon and Fork (Windsor)

WIN1/3FOLD (spoon)	WIN1/2FOLD (fork)
L14cm	L14cm

Tasting Spoon and Fork (Eclipse)

ECL1/3FOLD (spoon)	ECL1/2FOLD (fork)
L14cm	L14cm

Giant Serving Spoon

GSS456	GSS385
L45.6cm	L38.5cm

LSF320
Long Serving Fork
L32cm

LSS320
Long Serving Spoon
L32cm

LS1821
Ladle Set
L18 x W11.5 x H21cm, Ladle : L24cm

Rest for Serving Item

SPT8049	SPT1285
L7.5 x W5 x H4.1cm	L12 x W9 x H7cm

SPT2510
Rest for Serving Item
L25 x W10 x H2.5cm

SPT1385
Rest for Serving Item
L12.9 x W8.4 x H2.5cm

HSI105
Holder for Serving Item
dia.10.5 x H17.8cm

BISN270
Buffet Card Stand
L10.5 x W8.6 x H20cm

BJS279
Buffet Card Stand
L10 x W8.6 x H20cm

BCS270
Buffet Card Stand
L10.5 x W5.8 x H16cm

BXS270
Buffet Card Stand
L10.5 x W5.8 x H16cm

BYS270
Buffet Card Stand
L9 x W8.6 x H16cm

BHS270
Buffet Card Stand
L10.5 x W5.8 x H16cm

NEW

BS170L
Menu Holder
L7.5 x W2.5 x H2.5cm

BS171
Menu Holder
L3.8 x W2.5 x H2.2cm

BSR170
Menu Holder
L2.5 x W2.5 x H2.3cm

Menu Holder
BS170
L2.5 x W2.5 x H2.5cm
BS2020
L2 x W2 x H2.5cm

BS176
Menu Holder
L8 x W9 x H5.7cm

BS173
Menu Holder
dia.3 x H4.5cm

BS172
Menu Holder
dia. 2.5 x H2cm

Menu Holder
BS175S
L2.5 x W2.5 x H2.5cm

BS175L
L3.8 x W3.8 x H3.8cm

LS286
Reserved Stand
L10.2 x W3.5 x H5.3cm

50Y
Card Stand
L10.2 x W3 x H5.8cm

RS286
Reserved Stand
L9 x W5.3 x H6cm

Wine Cooler And Accessories

Bottle Stand
FS1305
L34.3 x W11.5 x H26.7cm
FS1305L
L41.6 x W13.7 x H34.5cm

FS3012
Bottle Stand
L32.5 x W12 x H6cm

FS2425
Bottle Stand
L25.7 x W10 x H26.5cm

PW816B
Bottle Stand
L18.5 x W6 x H21cm

Bottle Coaster
FS0901
dia.9.5 x H1cm
FS0901L
dia.13.4 x H1.5cm

PE44
Insulated Double Wall Champagne Cooler
dia.44x H26.3cm

CZ36286
Functional Service Trolley
-1 retractable serving shelf: L16.5×W20.2cm
dia.62×H86cm

NEW

PB420BHS
Wine Cooler with Bottle Holder
dia.42 x H29.8cm, capacity:22L

NEW

Oval Container - Hammered Finish

OC4525	OC6840
L45 x W25 x H25cm	L68 x W40 x H25cm

WCS135
Double Wall Wine Cooler Set
dia.30 x H69cm

WCS35
Double Wall Wine Cooler Set
L45 x W45x H66.5cm

NEW

Wine Cooler

HR042 (for 1 bottle) dia.19.5×H21.5cm	HR043 (for 2 bottles) dia.23.9×H24.1cm

Wine Cooler Stand

HR044 (fit for HR042) dia.28 x H59cm	HR045 (fit for HR043) dia.28 x H59cm

PE37
Double Wall Oval Shape Wine Cooler (for 2 bottles)
L32 x W21.5 x H23cm

37P (fit for PE37)
Oval Shape Wine Cooler Stand
L22 x W18 x H63cm

Wine Cooler

PE28 (for 1 bottle) dia.21 x H22cm	PE33 (for 2 bottles) dia.24.9 x H21.3cm

Wine Cooler Stand

28P (fit for PE28) dia.19 x H63cm	33P (fit for PE33) dia.21 x H63cm

Color Options:

Ice Bucket

PE30T
Ice Tong
L17.5cm

PE34T
Ice Tong
L13.7cm

Ice Tong
PE38T
L13.8cm

Ice Tong
NC510
L10cm

NC515
L15cm

MIRROR FINISH / HAMMERED FINISH / MATT FINISH

PE39HCUS
Small Double Wall Ice Bucket with Cover and Tong
L13.8 x W11.6 x H16.5cm, Tong L13.7cm
capacity 0.95L

PE39
Small Double Wall Ice Bucket with Cover and Tong
dia.11.7 x H16.5cm, Tong L13.7cm
capacity: 0.95L

PE38
Double Wall Square Ice Bucket with Cover and Tong
L13.5 x W13.5 x H18cm, Tong L13.8cm
capacity: 1.25L

PE30
Ice Bucket with Tong
dia.16.3 x H14cm, Tong L17.5cm
capacity: 1.25L

PE34
Double Wall Ice Bucket with Cover and Tong
dia.15.5 x H18.5cm, Tong L13.7cm
capacity: 1.6L

PE32
Double Wall Ice Bucket with Cover and Tong
dia.19.5 x H20cm, Tong L13.7cm
capacity: 1.2L

PE36
Double Wall Oval Shape Ice Bucket with Cover and Tong
L22 x W14 x H18.5cm, Tong L13.7cm
capacity: 1.4L

Punch Bowl
PB360
dia.36 x H25.6cm, capacity: 12.5L

PB420
dia.42 x H29.8cm, capacity: 22L

PB460
dia.46 x H32.8cm, capacity: 36L

PB360L
Punch Bowl Ladle
dia.8.8 x H32cm, capacity: 0.1L

TRAY

Round Service Tray
RDT355 dia.35.5cm | RDT390 dia.39cm | RDT460 dia.46cm

Round Tray
WY1600
dia.40cm

Oval Tray
SOT3116NH
L25 x W16 x H2.3cm
SOT3816NH
L31.5 x W16 x H2.3cm

Oval Tray with Handle
SOT3116
L31 x W16 x H2.3cm
SOT3816
L38.5 x W16 x H2.3cm

Oval Service Tray
OVT4635
L46.7 x W35.7cm
OVT5137
L51.5 x W37.5cm
OVT5645
L56.7 x W45cm

Oval Service Tray with Handle
OVT4635H
L59.7 x W35.7cm
OVT5137H
L64.5 x W37.5cm
OVT5645H
L69.7 x W45cm

RTT5742
Rectangular Service Tray
L57 x W41cm

RTT5742H
Rectangular Service Tray with Handle
L70 x W41cm

TP46644
Wooden Tray
L66.5 × W44.5 × H5.5cm

Rectangular Service Tray
RTT3226
L32.5 x W26.5cm
RTT4632
L46 x W32.5cm
RTT5137
L51.7 x W37.7cm
RTT5742
L57 x W42.5cm

WBWT4636
Wooden Tray
L46 × W36 × H5.8cm

TP46644SET
Wooden Tray & Stand
L66.5×W44.5×H81.5cm

Afternoon Tea Stand

NEW

Giant Cake Stand
LB2830
L70 x W78 x H136cm

NEW

Afternoon Tea Stand With Acrylic Plates
SN2710 (stand)
L26.8 x W14.6 x H38cm

SN2710PLATE
L26.8 x W14.6

NEW

DJ61622
Cake Stand
Dia16 x H22.5cm

NEW

FDS3660
Afternoon Tea Stand with 6 S/S Plates
L35.2 x W35.2 x H49cm
S/S Oval Plate: L21.3 x W12.9cm

FDS3549
Afternoon Tea Stand with 5 S/S Plates
L35.2 x W35.2 x H49cm
S/S Oval Plate: L21.3 x W12.9cm

NEW

WK38
Wedding Cake Knife
L38.5cm

NEW

TS3650
Tree Stand-10pcs leaf-shape plates
Dia36.5 x H50cm

IC839B
Afternoon Tea Stand with Black Stone Plate
L30 x W8 x H30cm

IC839J
Afternoon Tea Stand with Green Stone Plate
L30 x W8 x H30cm

SN3717
Food Stand with S/S Plates
stand: L37.2 x W17 x H31cm | plates: dia.13.5cm

SN2850
Afternoon Tea Stand (including plates)

SN2850 (stand)	SN2850PLATE (acrylic plate set)
L28 x W13.5 x H34.5cm	L28.5 x W11cm

SN3340B
Afternoon Tea Stand (including plates)
(top plate with 3 square recesses)
L33.5 x W13.3 x H40.3cm

Cake Stand

PW839Q (stand)	A0072 (rim plate)
dia.20 X H27cm	9″

SN3340A
Afternoon Tea Stand (including plates)
(top plate with 3 square recesses)
L33.5 x W13.3 x H40.3cm

P3340H
Square Sauce Container (tall)
L5.9 x W5.9 x H6.4cm

P3340S
Square Sauce Container (short)
L5.9 x W5.9 x H4cm

Acrylic Plate Set Only for SN3340
(top plate with / without 3 square recesses)
SN3340PLATEA / SN3340PLATEB
top: L28.5 x W11cm
middle: L39.5 x W11cm
bottom: L28.5 x W11cm

3-Tiers Cake Stand
LB2940 (stand)
dia.29 x H40cm
A0072 (rim plate)
9″

Built-up 3 Tiers Cake Stand
LB3843 (stand)
L36 x W26 x H38cm
A0072 (rim plate)
9″

Built-up 2 Tiers Cake Stand
LB3133 (stand)
L35 x W24.5 x H37cm
A0072 (rim plate)
9″

3-Tiers Cake Stand
PC839
L30 x W30 x H46cm
A0072 (rim plate)
9″

3-Tiers Cake Stand
PW839Y
L28.3 x H42cm
A0072 (rim plate)
9″

Bowl Stand
SN3621 (stand)
L36.5 x W21.5 x H36.5cm
SN3621GLASS (glass bowl)
dia.9.8 x H8.6cm

SN269
3-Tiers Afternoon Tea Stand with Removable Cover
dia.26.9 x H55cm
A0072 (rim plate)
9″

Cake Stand -2 Tiers
PW839R (stand)
dia.20 x H43 cm
A0072 (rim plate)
9″

CONTAINER

MIRROR FINISH / HAMMERED FINISH

FR002
Fruit Basket
L24.3 x W15.2 x H6.5cm

FR001
Fruit Basket
L27.1 x W12.2 x H3.8cm

Rectangular Platter
FP2010
L20.8 x W10.8 x H1cm

FP2412
L24.8 x W12.8 x H1cm

FP2424
Square Platter
L24.8 x W24.8 x H1cm

Round Flat Plate
RFP304
dia.30.4 x H5.4cm

RFP360
dia.36 x H6cm

OP4026
Oval Platter
L40 x W26 x H5cm

FB012
Square Tray
L33 x W33 x H2.5cm

SQB325
Trapezium Tray
L32.5 x W32.5 x H4.8cm

Triangular Flat Plate
TFP300
L30 x W30 x H2cm

TFP400
L40 x W40 x H2cm

TFP460
L46 x W46 x H2cm

RTR360
Rectangular Tray
L36.5 x W30.5 x H2cm

HT4931
Hexagon Tray
L49.2 x W31.3 x H2cm

SFT340
Square Flat Tray
L34 x W34 x H4.3cm

RCT5515
Rectangular Tray with Handle
L55 x W15cm

RFT424
Rectangular Flat Tray
L42.4 x W32.8 x H3cm

Oblong Tray
LUT378
L38 x W14.5 x H2.5cm

LUT500
L50 x W14.5 x H2.5cm

Almond-shaped Bowl

SL0004	SL0005
L40.4 x W16.5 x H6cm	L32.4 x W16.5 x H6cm

OB3728
Large Oval Bowl
L37.2 x W28.8 x H11cm

Oblong Curve-shaped Bowl

SL0001	SL0002
L60.6 x W23 x H12.5cm	L51.5 x W20.1 x H12cm

Flower-shaped Bowl
FSB355
L33.5 x W33.5 x H13.1cm

Square Bowl

FB001	FB014	FB015
L18.5 x W18.5 x H7cm	L24.3 x W24.3 x H7.6cm	L26.2 x W26.2 x H8.5cm

Rectangular Bowl

SB2212	SB2514	SB2915
L22 x W12 x H5.2cm	L25 x W14 x H6cm	L29.2 x W15 x H7.4cm

Triangular Bowl

TB190	TB300
L19 x W19 x H5.5cm	L30 x W30 x H8.8cm

IB3427
Irregular Bowl
L34 x W27x H10.3cm

Sushi Plate

LUT660	LUT780	LUT900
L66 x W10 x 1.3cm	L78 x W10 x 1.3cm	L90.5 x W10 x 1.3cm

Square Bowl

SB080 L8 x W8 x H3.5cm	SB118 L11.8 x W11.8 x H5cm	SB250 L25 x W25 x H9.7cm

Round Bowl

RB140 dia.14 x H4cm	RB180 dia.18 x H5.3cm	RB200 dia.20 x H5.5cm
RB255 dia.25.5 x H7.7cm	RB305 dia.30.5 x H8cm	RB330 dia.33 x H9cm
RB355 dia.35.5 x H9.5cm	RB385 dia.38.5 x H11.8cm	RB450 dia.45 x H15cm

MIRROR FINISH / HAMMERED FINISH

FB009
Tear Drop-shaped Bowl
L40 x W24 x H16cm
higher side: H16cm
lower side: H9.5cm

FB010
Leaf-shaped Bowl (curved shape)
L40 x W27.8 x H13cm

FB006
Oval Bowl
L25.5 x W16.2 x H8cm

Square Curve Plate

SCP15 L15.2 x W15.2 x H4.3cm	SCP20 L20 x W20 x H5.5cm

FB008
Oval Bowl (curved shape)
L25 x W16.2 x H9.6cm

GH1310
Round Container
dia.13 x W10cm

NEW

VMF305
Rectangular Tray with 3 cups
Tray: L35.5 x W11 x H2 cm
Cup: Dia 9.3 x H8.4 cm

GH1712
Round Container (curved shape)
dia.17 x H12cm

GH1708
Round Container
dia.17 x H8cm

GH1314
Round Container (curved shape)
dia.12.5 x W14cm

GH1015
Square Container
L10 x W10 x H15cm

BASKET

MIRROR FINISH / HAMMERED FINISH

FB013
Basket
L23 x W23 x H10.5cm

WLR025
Round Basket
dia.25 x H7.5cm

Round Basket
WLR030
dia.30 x H5cm

WLR049
dia.49 x H7.5cm

WLS2828
Square Basket
L28.5 x W28.5 x H9.5cm

FB011
Basket
dia.18.3 x H12.7cm

WL587L
Basket
dia.21 x H8.5cm

WL265
Basket
dia.26.5 x H12cm

WL320
Basket
dia.32 x H26cm

FB007
Bread Bowl (with rack)
L28.5 x W19.4 x H24.5cm

BSH001
Bread Stick Holder
L16 x W11 x H24cm

GH001
Amenities Box Set - Each Box Inside with Acrylic Container
L31.8×W13.8×H11cm

NEW

TR003
Toast Rack
L14 x H11.5cm

NEW

BSH27
Bread Stick Holder
L27 x W6-12 x H4cm

NEW

GH001W (Wooden Tray)
L27.5×W8×H2cm

TR386
Toast Rack
L20 x W10 x H14.5cm

TR002
Toast Rack
L22 x W8.5 x H9.7cm

FP2412
Rectangular Platter for TR002-PM
L24.8 x W12.8 x H1cm

ICB003C
Double Wall Ice Cream Cup with Cover
dia.12 x H16cm (body + cover)

ICB004C
Double Wall Ice Cream Cup with Cover
dia.12.9 x H16cm (body + cover)

ICB002
Double Wall Cup with Foot
dia.12 x H8.5cm

Caviar Cup

CC001	CC003
dia.9.5 x H7.3cm	dia.11 x H8.5cm

CC002S
Caviar Cup
dia.12 x H13.2cm

CC002
Double Wall Caviar Cup
dia.12.6 x H13.7cm

NEW

CSS001
Caviar Server Set Consisting of-6 Stainless Steel Bowls with glass insert dia 9cm
L64 xW37.5x H15cm(without handle L57cm)

NB830
Nuts Bowl (rotating design)
L24.7 x W15.3 x H31.8cm

NB810
Nuts Bowl
L17 x W17 x H26.6cm

NB820
Nuts Bowl
L18.2 x W17.5 x H25.3cm

NEW

PW820T
Nuts Bowl
L18 x W17 X H19.5cm

PW820B
Nuts Bowl
L18 x W17 x H19.5cm

NB003
Nuts Bowl
L21.8 x W10.1 X H18cm

NB002
Nuts Bowl
L21.7 x W10 x H13cm

BL167
Bowl with Handle
L16.7 x W7.8 x H8.3cm

Nuts Bowl
VM820
L35.6 x W10.9 x H5cm

VM810
L30.5 x W10.2 x H5cm

ZJ42708
Nuts Bowl with Wooden Stand
L27.5×W8×W2cm

SHICF08
French Fries / Ice Cream Cup
dia.8.2 x H11.8cm

CU08
Drinking Cup
dia.8.5 x H10.5cm

TW138
Glass Holder
dia.6.5 x H10cm

CP139
Glass Holder
dia.6.6 x H10.5cm
*size avaiable for special request
杯托尺寸可按客户需求订造

CP140
Glass Holder
dia.6.5 x H7.6cm

FBS1546
Fruit Stand - 3 Tiers
stand:dia.15.8 x H46cm
bowl: dia.24cm(upper),dia.28.3cm(medial),dia.32.4cm(lower)

FBS1533
Fruit Stand - 2 Tiers
stand: dia.15.8 x H33.7cm
bowl: dia.28.3cm(upper),dia.32.5cm(lower)

FBF1545
Fruit Stand - 2 Tiers
stand: dia.15.8 x H45cm
bowl: dia.28.3cm(upper),dia.32.5cm(lower)

FBF1541
Fruit Stand - 2 Tiers
stand: dia.15.8 x H41cm
bowl: dia.28.3cm(upper),dia.32.5cm(lower)

PLATE COVER

MIRROR FINISH / MATT FINISH

TP Series

NTP Series

Oval Plate Cover

TP0806 / NTP0806 L21.5 x W16.5cm	TP0907 / NTP0907 L23.7 x W17.9cm	TP1208 / NTP1208 L31.4 x W21.9cm
TP1410 / NTP1410 L36.5 x W25.4cm	TP1511 / NTP1511 L39.6 x W29cm	TP1712 / NTP1712 L42.9 x W31.9cm
TP1913 / NTP1913 L48.4 x W33.3cm		

TP Series

NTP Series

Round Dome Cover

TPR06 / NTPR06 dia.16.8cm	TPR08 / NTPR08 dia.20.3cm	TPR09 / NTPR09 dia.24cm
TPR10 / NTPR10 dia.25.7cm	TPR11 / NTPR11 dia.29cm	TPR12 / NTPR12 dia.30.2cm
TPR14 / NTPR14 dia.36cm		

Oval Plate Cover

TW708 L21.5 x W16.5cm	TW709 L23.7 x W17.9cm	TW712 L31.4 x W21.9cm	TW714 L36.5 x W25.4cm
TW716 L39.6 x W29cm	TW717 L42.9 x W31.9cm	TW719 L48.4 x W33.3cm	

Round Dome Cover

TW808 dia.20.3cm	TW809 dia.24cm	TW813 dia.25.7cm	TW811 dia.29cm
TW813L dia.30.2cm	TW814 dia.36cm		

Plate Cover

PC108 dia.27.4 x H6.1cm (inner 26.9cm)	PC118 dia.28.2 x H6.1cm (inner 27.8cm)	PC148 dia.29.5 x H6.1cm (inner 28.6cm)
PC138 dia.29.8 x H6.1cm (inner 29cm)	PC158 dia.30.9 x H6.8cm (inner 30cm)	PC128 dia.32 x H6.1cm (inner 31.4cm)

Square Plate Cover

SQR310 (cover) L31 x W31 x H7cm	SQR310POR (porcelain) L29.5 x W29.5 x H3.5cm

Trio Plate Cover
TPC280 (cover)
L28.5 x W28 x H7cm

TPC280POR (porcelain)
L26 x W26 x H8cm

Rectangular Plate Cover
RPC4030 (cover)
L40.3 x W29.7 x H7.2cm

RPC4030POR (porcelain)
L38.5 x W28 x H2.5cm

Leaf-shape Plate Cover
LPC530 (cover)
L53 x W24.7 x H7cm

LPC530POR (porcelain)
L51.5 x W23 x H6.8cm

Sheer Bowl Cover
SBC520 (cover)
dia.28.8cm
max height: 8cm, min height: 4.5cm

SBC520POR (porcelain)
dia.28cm
max height: 12cm, min height: 8cm

Rectangular Plate Cover
RPC4219 (cover)
L42.1 x W19 x H5.9cm

RPC4219POR (porcelain)
L40.7 x W17 x H2.5cm

Curve Rectangular Plate Cover
CRP3831 (cover)
L38.1 x W30.5 x H7.6cm

CRP3831POR (porcelain)
L36.5 x W27 x H4.3cm

Oval Plate Cover
OPC5230 (cover)
L52 x W29.5 x H7cm

OPC5230POR (porcelain)
L50.5 x W28 x H6.7cm

OPC4533 (cover)
L45 x W33 x H7cm

OPC4533POR (porcelain)
L43 x W31.5 x H6.7cm

Table Accessories

Tea Set

OVT2822 (oval tray)
L28.2 x W21.7cm

HRMJ15 (milk jug)
15cl / 5.3oz

HRCP30 (water pot)
30cl / 10.5oz

HRTP35 (tea pot)
35cl / 13oz

NPTN826S (tea strainer)
dia.6.5 x H2.5cm (base)
L14.5 x W6.5 x H2cm (strainer)

LE01 (lemon squeezer)
L8 x W7 x H2.5cm

HRSBC25 (round sugar bowl with cover)
25cl / 9oz

SBH004
Oval Sugar Bags Holder
L8.2 x W7.2 x H6cm

SBH003
Rectangular Sugar Bags Holder
L7 x W6.3 x H3.5cm

Condiment 5pcs set
FB005

FB005A(round bowl)
dia.10 x H4.3cm

FB005B(irregular bowl)
L11.3 x W8.6 x H4.5cm

FB005C(underliner)
L20 x W14 x H2.2cm

FB005D(tooth pick holder)
L5.2 x W2.6 x H6cm

FB005E(sugar tong)
L11cm

Milk Jug and Sugar Bags Holder Set -
MSS001

MSS001A(Square sugar bags holder)
L6.7 x W6.7 x H6.7cm

MSS001B (underliner)
L15 x W8 x H1cm

CP031(milk jug)
15 cl / 5.3 oz

Butter Dish

PW32
dia.7cm

PW32L
dia.9cm

PW35
Butter Dish with Cover
plate: dia.12.6 x H1.3cm
cover: dia.9.5 x H6cm

PW830
Sauce Dish
L23 X W8 X H1.4cm

SHSB011
Sauce Bowl
capacity: 0.35L

SHSB001
Sauce Bowl
capacity: 0.3L

SAB001
Sauce Bowl
capacity: 0.3L

MIRROR FINISH / HAMMERED FINISH

Round Pan
SRP2203
L36.8 x W22.8 x H3.5cm

SRP2803
L44.1 x W28.3 x H3.5cm

SOP2822
Oval Pan
L28 x W22 x H3.5cm

NEW

SOP3523TH
Oval Pan - Two Handles
L35 x W23.4 x H4.5cm

NEW

SOP2822TH
Oval Pan - Two Handles
L28 x W18.7 x H4.5cm

SSPL1506
Sauce Pot with Lid
L30.2 x W15 x H10.5cm

SSP1305
Sauce Pot
L26 x W13 x H5cm

SSP1005
Sauce Pot
L20.5 x W10 x H5cm

SSP0603
Sauce Pot
L12 x W6 x H3cm

NEW

SSQ0806
Sauce Pot with Lid
dia.8cm(upper),dia.6.3cm(bottom)
Depth: 8.5cm,Handle: 8.5cm

SRB0803
Round Bowl with Handle
dia.8 x H5.7cm

SRB1004
Round Bowl with Handle
dia.10.2 x H7.2cm

Warmer with Handles
SWH1610
L24.8 x W10 x H5cm

SWH2817
L36 x W17.5 x H5cm

Condiment 9Pcs Set (wooden tray)
SCON001
L37 x W6.5 x H16.3cm

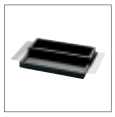

Condiment 9Pcs Set (wooden tray)
RCON001
L22 x W12 x H16cm

Condiment 9Pcs Set (wooden tray)
TCON001
L17 x W12 x H20cm

Vinegar / Oil Bottles with Tray
CON001ABSET
L17.3 x W7 x H16.5cm

Salt Shaker
CON001C
L5.1 x W3.5 x H5cm

Pepper Shaker
CON001D
L5.1 x W3.5 x H5cm

Sauce Pot
CON001A
L4.5 x W4.5 x H14.5cm, capacity: 0.15L

Vinegar Pot
CON001B
L4.5 x W4.5 x H12cm, capacity: 0.12L

Cube Container (tall)
CON001E
L4.5 x W.4.5 x H6.2cm

Cube Container (short)
CON001F
L4.5 x W.4.5 x H4cm

CON001I
Spoon (2pcs per set)
L10.5cm

NEW

Condiment Set Salt & Pepper & Oil & Vinegar Bottles
ZT42018-Set

ZT42018-0(wood tray)	ZT42018-1(wood pot)	ZT42018-2(glass pot)	ZT42018-3(spoon)
L20×W18×H2cm	dia.6.6×W18×H2cm	L6.2×H13.4cm	L12.5cm

NEW

Wooden Salt & Pepper Mill

ETSM20	ETPM20
L22.8 x W13.9 x H14.5cm	L22.8 x W13.9 x H14.5cm

NEW

Condiment Set Chopsticks Cutlery holder
ZT43616-Set

ZT43616-0 (tray)
L36×W16×H2.5cm

ZT43616-1 (cutlery holder)
L8×W8×H14cm

ZT43616-2 (cutlery holder)
L8×W6×H14cm

ZT43616-3 (chopsticks holder)
L6×W5×H14cm

ZT43616-4 (tooth pick holder)
L4.8×W3.6×H6.4cm

ZT43616-5 (sugar pack holder)
L9×W6×H5cm

ZT43616-6 (tissues box)
L14×W14×H4.5cm

Salt Shaker
CON001G
L4.5 x W2.5 x H5cm

Pepper Shaker
CON001H
L4.5 x W2.5 x H5cm

NEW

FS27DR
Jam Holder
L20.6 x W5.9 x H1cm

JH001
Jam Holder
L18 x W5 x H1cm

JH002
Jam Holder
L21 x W5.8 x H10.5cm

JH002A
Jam Stand with Vase
L11.2 x W11.2 x H18cm

PW98
Jam Holder
L10.2 x W9.7 x H15.1cm

T98
Jam Holder
L10.3 x W9.5 x H14cm

TC001
Table Cleaner (small)
L16cm

TC002
Table Cleaner (large)
L24cm

TC003
Table Cleaner
L14 x W14 x H5cm

TC004
Table Cleaner / Porcelain Insert Lifter
L15.3 x W1.4cm

PS826
Tea Strainer
L19.5 x W6.8 x H5.8cm

NPZN826
Tea Strainer
dia.6.5 x H2.5cm (base)
L14.2 x W7.7 x H2cm (strainer)

PW826
Tea Strainer
dia.6.5 x H2cm (base)
L14.2 x W7.7 x H2cm (strainer)

NPTN826S
Tea Strainer
dia.6.5 x H2.5cm (base)
L14.5 x W6.5 x H2cm (strainer)

CP68
Tea Pot Warmer
dia.15.4 x H5.1cm

TW68
Tea Pot Warmer
dia.15.4 x H4.7cm

BF68
Tea Pot Warmer
dia.15.4 x H4.7cm

S68
Tea Pot Warmer
dia.15.5 x H4.7cm

WY68
Tea Pot Warmer
dia.15.4 x H4.7cm

TOWEL DISH

U27D
Towel Dish
L13 X W5.8 X H3.1cm

Towel Dish
27D
L13 X W9.4 X H1.3cm

27DM
L15.5 x W10.2 x H1.3cm

27DL
L20.4 x W11.5 x H1.3cm

Towel Basket
SS26
L34 X W25.7 X H19cm

Towel Tong
SS26T
L20cm

TW27D
Towel Dish
L13.5 x W10.8 x H1cm

PL27D
Towel Dish
L13.3 X W10.3 X H1cm

PA27DR
Towel Dish
L13.3 X W10.3 X H1cm

BF27D
Towel Dish
L13.5 X W10.8 X H1cm

HF27D
Towel Dish
L15.2 X W5.2 X H3.3cm

UC27D
Towel Dish
L14.5 x W6.8 x H1.2cm

UCTW27D
Towel Dish
L14.5 x W6.8 x H1.2cm

Towel Dish
MG27D
L18 x W9.2 x H1.5cm

SY27D
L16 x W8 x H1.5cm

PE27D
Towel Dish
L23 X W8 X H1.4cm

GL27D
Towel Dish
L22.8 x W8 x H1.4cm

FS27D
Towel Dish
L21 x W5.6 x H1cm

TS27D
Towel Dish
L21 X W8 X H2cm

Toothpick Box & Holder

Toothpick Holder
HA811
dia.4.5 x H6.2cm

Toothpick Holder
NPW811
dia.3.9 x H11cm

Toothpick Holder
FS811
dia.3.5 x H6cm

RD811
Toothpick Holder (round base)
dia.8.7 x H5.8cm

OV811
Toothpick Holder (oval base)
L12 x W5 x H7.7cm

ES811
Toothpick Holder
dia.6.3 x H6cm

ES810
Toothpick Holder
dia.3 x H5cm

NEW

HR047
Toothpick Box
L11 x W6 x H4.6cm

S812
Toothpick Box
L11 x W6 x H3cm

STH1107
Toothpick Box
L10.5 x W5.5 x H4.6cm

JDB810
Toothpick Holder w/Stone
L9.3 x W6 x H2.6cm

AT004
Windproof Ashtray
dia.9.4 x H3.8cm

AT005
Ashtray
dia.9.8 x H3cm

AT002
Windproof Ashtray
dia.14.1 x H5cm

AT003
Windproof Ashtray
L9 x W9 x H5cm

S833
Ashtray
dia.10.8cm

AT001
Ashtray
dia.11.5cm

Cigar Ashtray

PW833S	PW833M	PW833L
dia.10.9cm	dia.14cm	dia.16.5cm

833S
Ashtray
dia.14.5 x H4.5cm

FV001
Flower Vase
dia.9 x H9.4cm

PBTHT
Tong with Holder
dia.4.8 x H13.2cm (holder), L11cm (tong)

SS823
Candle Stand (3 heads)
L21 x W15.2 x H42cm

SS825
Candle Stand (5 heads)
L21 x W21 x H42cm

Candle Stand

CBS821	CBL821
L10.3 x W10.3 x H12cm	L15.3 x W15.3 x H16.8cm

Napkin Ring & Number Stand

NEW

815LCT
Oval Shape Napkin Ring
L4.6 X W4.2 X H3cm

NEW

FH815
Napkin Ring
dia.4.25 X H1cm

NEW

NRHS43
Napkin Ring
dia.4.3 X H3.7cm

HG815
Napkin Ring
dia.4.7 x H1.3cm

RC815
Napkin Ring
dia.4.3 X H3.5cm

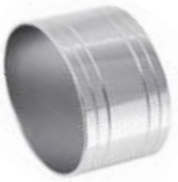

SO815
Napkin Ring
L4.6 x W4.2 x H3cm

815M
Napkin Ring
dia.4.2 X H2.5cm

VM815
Napkin Ring
dia.4.2 x H3cm

IC815
Napkin Ring
dia.4.6 X H2.5cm

PP815
Napkin Ring
dia.4.5 x H2.5cm

S815
Napkin Ring
dia.4 x H3.3cm

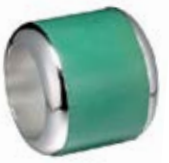

JDT815
Napkin Ring w/ Stone
dia.4.5 X H4cm

HH815
Napkin Ring
dia.5 X H6.9cm

Napkin Ring
GA815
dia.4.5 x H2.5cm

GA815L
dia.5.2 x H2.8cm

815W
Napkin Ring
dia.4.4 x H3.4cm

FS815
Napkin Ring
dia.4 X H4.5cm

WNK®
FIRST IN FOOD SERVICE

RS815
Napkin Ring
dia.6.8 x H1cm

BJ815
Napkin Ring
L5.2 x W3 x H2.5cm

SYS815H
Napkin Ring
dia.4 x H3.8cm

SQ815H
Napkin Ring
L3.8 x W3.8 x H3cm

SYO815
Napkin Ring
L5.3 x W4.7 x H3.8cm

JW815
Napkin Ring
dia.4.7 x H4cm

HY815
Napkin Ring
dia.4 x H3.8cm

SKT815
Napkin Ring
dia.4 x H3.8cm

50E
Table Number Stand
H48.3cm

GA50
Table Number Stand
dia.14.7 x H48.3cm

NOL50B
Table Number Stand
dia.16 x H46cm

SS50
Table Number Stand
dia.8 x H38cm

SS50P
Table Number Stand
H37cm

50P
Table Number Stand
H36.5cm

50SH
Table Number Stand
dia.10.7 x H36.5cm

Acrylic Table Number
TN001
dia.12.5cm (5")
*white colour with black or red wording

Hotel Room Amenities

NEW

TOB003
Tissue Holder
L16.5 x W12.5 x H14.5cm, base L12.5 x W12.5cm

TOB002L
Tissue Holder
L16.5 x W12.5 x H14.5cm, base L12.5 x W12.5cm

Tissue Box

ZYTOB001L
L14 x W14 x H4cm

TOB001
L12.6 x W12.3 x H4cm

SN0504RB
Tissue Box with Removable Base
L11.8 x W11.8 x H13.5cm

Vanity Amenity Box with Black Velvet

VAB1210
L25 x W16 x H7.1cm

VAB0905 / VAB0905C (with 3-compartment)
L23.1 x W12 x H9cm

SPG1010
Square Glass Coaster
L10 x W10 x H0.4cm

Soap Dish

PL27D (bottom tray)
L13.5 x W10.5 x H1cm

SD108 (soap dish)
L10.2 x W8 x H1.6cm

WB002
Bucket
dia.24.5 x H27.5cm

WB001
Bucket
dia.24.5 x H29cm

Crown Series

NEW

Sugar Bowl
SUSB25
25cl / 9oz

Milk Jug

SUMJ15 15cl / 5.3oz	SUMJ25 25cl / 9oz

Tea Pot

SUTP25 25cl / 9oz	SUTP50 50cl / 17oz	SUTP100 100cl / 36oz

Coffee Pot

SUCP25 25cl / 9oz	SUCP50 50cl / 17oz	SUCP100 100cl / 36oz	SUCP150 150cl / 53.5oz	SUCP200 200cl / 71.5oz

Water Pitcher with Ice Guard

SUWP150 150cl / 53.5oz	SUWP200 200cl / 71.5oz

Dream Series

Sugar Bowl
DSHSBC25 (with cover)
25cl / 9oz
DSHSB25 (without cover)
25cl / 9oz

Milk Jug
DSHMJ20
20cl / 7oz
DSHMJ25
25cl / 9oz

Tea / Coffee Pot
DSHTCP25 | DSHTCP35 | DSHTCP50
25cl / 9oz | 35cl / 13oz | 50cl / 17oz
DSHTCP100 | DSHTCP150 | DSHTCP200
100cl / 36oz | 150cl / 53.5oz | 200cl / 71.5oz

Water Pitcher
DSHWP150 | DSHWP200
150cl / 53.5oz | 200cl / 71.5oz

EMINENCE SERIES

Q SERIES NEW

Oval Sugar Bowl
EQSBC25 (with cover)
25cl / 9oz

Oval Sugar Bowl
EQSB25 (without cover)
25cl / 9oz

Oval Milk Jug

EQMJ15	EQMJ25
15cl / 5.3oz	25cl / 9oz

Oval Tea Pot - Goose-Neck

EQTP35	EQTP60	EQTP100
35cl / 13oz	60cl / 21.5oz	100cl / 36oz

Oval Coffee Pot - Goose-Neck

EQCP35	EQCP60	EQCP100	EQCP150	EQCP200
35cl / 13oz	60cl / 21.5oz	100cl / 36oz	150cl /53.5oz	200cl /71.5oz

Oval Water Pitcher

EQWP150	EQWP200
150cl / 53.5oz	200cl / 71.5oz

E Series

Oval Sugar Bowl
EMSB25 (without cover)
25cl / 9oz
EMSBC25 (with cover)
25cl / 9oz

Oval Milk Jug
EMMJ15
15cl / 5.3oz
EMMJ25
25cl / 9oz

Oval Tea Pot - Goose-Neck
EMTP35
35cl / 13oz
EMTP60
60cl / 21.5oz
EMTP100
100cl / 36oz

Oval Coffee Pot - Goose-Neck
EMCP35 | EMCP60
35cl / 13oz | 60cl / 21.5oz
EMCP100 | EMCP150
100cl / 36oz | 150cl /53.5oz
EMCP200
200cl /71.5oz

Oval Water Pitcher
EMWP150
150cl / 53.5oz
EMWP200
200cl / 71.5oz

D Series

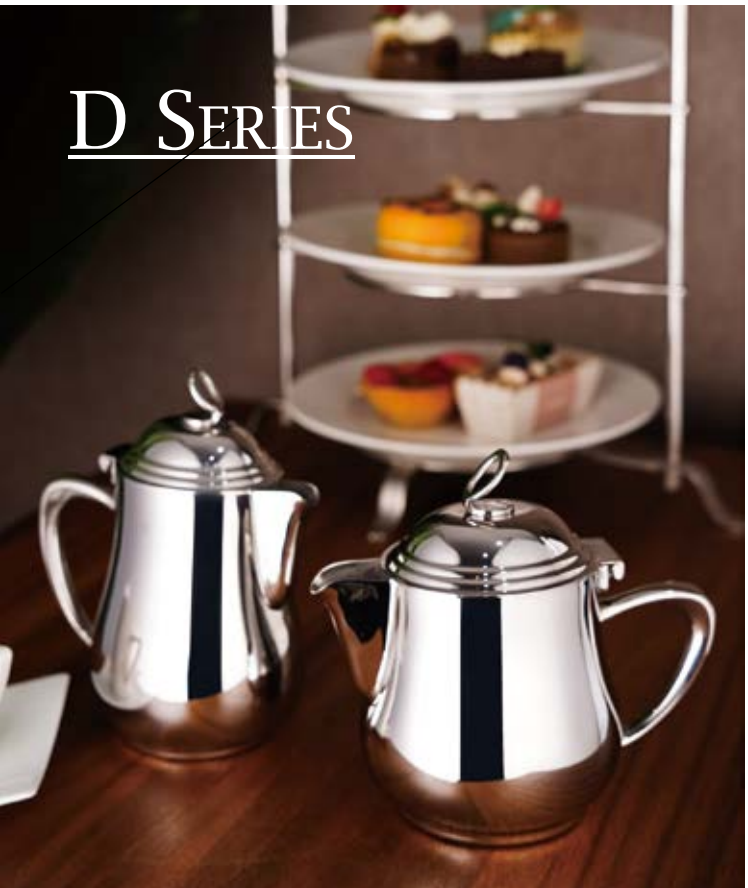

Oval Tea Pot
DEMTP35 | DEMTP60 | DEMTP100
35cl / 13oz | 60cl / 21.5oz | 100cl / 36oz

Oval Coffee Pot
DEMCP35 | DEMCP60 | DEMCP100 | DEMCP150 | DEMCP200
35cl / 13oz | 60cl / 21.5oz | 100cl / 36oz | 150cl / 53.5oz | 200cl / 71.5oz

Diva Series

Sugar Bowl
SB001
25cl / 9oz

Milk Jug
DAMJ15 | DAMJ25
15cl / 5.3oz | 25cl / 9oz

Single Wall Tea / Coffee Pot
DACP50 | DACP100 | DACP200
50cl / 17oz | 100cl / 36oz | 200cl / 53.5oz

Single Wall Water Pitcher
DAWP200
200cl / 53.5oz

Double Wall Tea / Coffee Pot
DWCP27
75cl / 25oz

Double Wall Water Pitcher with Ice Guard
DWPNL48
133cl / 45oz

Kent Series

Sugar Bowl
KTSB25
25cl / 9oz

Milk Jug
KTMJ15
15cl / 5.3oz

KTMJ25
25cl / 9oz

Tea / Coffee Pot
KTTP25
25cl / 9oz

KTDW50
50cl / 17oz (double wall)

KTCP50
50cl / 17oz

KTCP100
100cl / 36oz

Tea / Coffee Pot
KTCP150
150cl / 53.5oz

KTCP200
200cl / 71.5oz

Water Pitcher with Ice Guard
KTWP150
150cl / 53.5oz

KTWP200
200cl / 71.5oz

Kamina Series

Sugar Bowl
KASB25
25cl / 9oz

Milk Jug

KAMJ13	KAMJ15	KAMJ25	KAMJ60	KAMJ95
13cl / 4.7oz	15cl / 5.3oz	25cl / 9oz	60cl / 21.5oz	95cl / 34oz

Milk Jug

KAMJ13NH	KAMJ15NH
13cl / 4.7oz	15cl / 5.3oz

Tea Pot

KATP25	KATP50	KATP100
25cl / 9oz	50cl / 17oz	100cl / 36oz

Coffee Pot

KACP50	KACP100	KACP150	KACP200
50cl / 17oz	100cl / 36oz	150cl / 53.5oz	200cl / 71.5oz

Water Pitcher

KAWP150	KAWP200
150cl / 53.5oz	200cl / 71.5oz

Royal Series

Coffee Pot (Double Wall Insulated)

SP338	SP128	SP228	SP158	SP208
30cl / 10.5oz	60cl / 21.5oz	100cl / 36oz	150cl / 53.5oz	200cl / 72oz

Supreme Series

NEW

Double Wall Insulated Coffee Pot
SPH035
35cl / 11.8oz

Double Wall Insulated Coffee Pot
SPH060
60cl / 20.2oz

Double Wall Insulated Coffee Pot
SPH100
100cl / 36oz

Double Wall Insulated Coffee Pot
SPH150
150cl / 53.5oz

Double Wall Insulated Coffee Pot
SPH200
200cl / 71.5oz

Chinese Tableware

Chopstick Stand

NEW

CW815
Chopstick Stand
L8 x W3.5 x H1.2cm

NFRG111
Chopstick Stand
L7.8 x W3 x H1cm

NPD111
Chopstick Stand
L7.4 x W2.7 x H1cm

N111D
Chopstick Stand
L9.4 x W4 x H2.8cm

NPA111
Chopstick Stand
L9.4 x W3.1 x H2.6cm

NSSKZ111
Chopstick Stand
L10 x W1.5 x H0.6cm

NSZ111
Chopstick Stand
L6.7 x W1.8 x H0.9cm

NSS111
Chopstick Stand
L8 x W2.5 x H1.7cm

NPAA111
Double Chopstick Stand
L10 x W3.1 x H3.4cm

N111KEL
Double Chopstick Stand
L.9.9 x W3.5 x H1.7cm

N111KCB
Double Chopstick Stand
L8.8 x W3.5 x H1.7cm

NSS111KSS
Chopstick Stand
L8.3 x W2.5 x H1.6cm

NSSU111
Chopstick Stand
L6 x W1.8 x H1.7cm

NSSRB111
Chopstick Stand
L5 x W1.6 x H1.7cm

NSSGS111
Chopstick Stand
L5.3 x W1.5 x H1.3cm

NHP111
Chopstick Stand
L3 x W1.6 x H0.7cm

SELF - SERVING SPOON

WNK®
FIRST IN FOOD SERVICE

PA221
Self-Serving Spoon
L20.9cm

PE221
Self-Serving Spoon
L20.2cm

GA221
Self-Serving Spoon
L20cm

FS221
Self-Serving Spoon
L20cm

PR221
Self-Serving Spoon
L20cm

PD221
Self-Serving Spoon
L20.2cm

PM221
Self-Serving Spoon
L18.5cm

PME221
Self-Serving Spoon
L18.5cm

PL221
Self-Serving Spoon
L18.5cm

JDT221
Self-Serving Spoon w/Stone
L17.4cm

TW221
Self-Serving Spoon
L19.5cm

LG221
Self-Serving Spoon
L19.5cm

WY221
Self-Serving Spoon
L19.5cm

VM221
Self-Serving Spoon
L19cm

MEL1/3
Self-Serving Spoon
L19cm

221P
Self-Serving Spoon
L20.4cm

WAD1/3
Self-Serving Spoon
L20.3cm

TLP1/3
Self-Serving Spoon
L20.1cm

221Z
Self-Serving Spoon
L20cm

WIN1/3
Self-Serving Spoon
L19.6cm

CHOPSTICKS

AVAILABLE CHOPSTICK COLORS:

Glossy

Black (BF) Ivory (PF) Red (RF) BROWN (NF)

Wood Pattern

W Black (WB) W Brown (WN) W Ivory (WP)

ZH250BF
Chopsticks
L25cm

PT250PF
Chopsticks
L25cm

VN250BF
Chopsticks
L25cm

TW250NF
Chopsticks
L25cm

RG250BF
Chopsticks
L25cm

RB270BF
Chopsticks
L27cm

CR250WB
Chopsticks
L25cm

GH250BF
Chopsticks
L25cm

KW250BF
Chopsticks
L25cm

VO250BF
Chopsticks
L25cm

KN250BF
Chopsticks
L25cm

WG245BF
Chopsticks
L24.5cm

BM240BF
Chopsticks
L24cm

BD250BF
Chopsticks
L25cm

PE230PF
Chopsticks
L23cm

BJ250BF
Chopsticks
L25cm

PPS6C250PF
Chopsticks
L25cm

PPS6C250BF
Chopsticks
L25cm

BH250BF
Chopsticks
L25cm

BA250BF
Chopsticks
L25cm

BO250BF
Chopsticks
L25cm

JS260PF
Chopsticks
L26cm

JD230PF
Chopsticks
L23cm

BN250BF
Chopsticks
L25cm

BS250BF
Chopsticks
L25cm

BL230BF
Chopsticks
L23cm

BC250BF
Chopsticks
L25cm

BV250BF
Chopsticks
L25cm

PF250PF
Chopsticks
L25cm

PA250PF
Chopsticks
L25cm

PL250PF
Chopsticks
L25cm

PU250PF
Chopsticks
L25cm

PR250PF
Chopsticks
L25cm

Chinese Serving Item

Long Serving Spoon
WIN1/32
L26.4cm

Long Serving Fork
WIN1/31
L27cm

Long Serving Spoon
MEL1/9
L25.3cm

Long Serving Fork
MEL1/8
L26.2.cm

Long Serving Spoon
PA221S
L23.6cm

Long Serving Fork
PA221F
L23.6cm

Serving Spoon
TLP1/17
L21.6cm

Serving Fork
TLP1/16
L22.3cm

SOUP LADLE

Holding for Serving Ladle
S223 L36cm | S222 L25cm

Soup Ladle
PE223 L32.5cm | PE222 L24cm

WY223
Soup Ladle
L35.5cm

FS223
Soup Ladle
L32.5cm

Soup Ladle
PS223 L40cm | PS222 L25cm

Soup Ladle
PA223 L38.7cm | PA222 L24cm

Soup Ladle
PD223 L38.5cm | PD222 L24cm

Soup Ladle
RC223 L37.5cm | RC222 L24cm

SOUP LADLE STAND

NWY112N
Soup Ladle Stand
L13.5 x W5 x H4.8cm

NPA112
Soup Ladle Stand
L13.7 x W4.8 x H3.7cm

NS112
Soup Ladle Stand
L13.3 x W4.8 x H3.3cm

NSS112
Soup Ladle Stand
L11.4 x W3.5 x H2.2cm

NPR112
Soup Ladle Stand
L11.2 x W2.8 x H1.9cm

NTW112
Soup Ladle Stand
L10.9 x W2.7 x H1.3cm

NRC112
Soup Ladle Stand
L10 x W3.5 x H1.5cm

NPD112
Soup Ladle Stand
L9.8 x W4.6 x H2cm

NPE112
Soup Ladle Stand
L8.3 x W4 x H2.1cm

Finger Bowl & Underliner

TW32SET
Finger Bowl with Underliner (including glass)
dia.14 x H6.5cm

TW32GL
Glass Insert
dia.12.8 x H5.8cm

TW32U
Finger Bowl Underliner
dia.14 x H1.1cm

PA32
Finger Bowl
dia.10cm

PD32
Finger Bowl
dia.11.5cm

HL32
Finger Bowl
dia.10cm
Thickness 1.2mm

PA32U
Finger Bowl Underliner
dia.15.5cm

PD32U
Finger Bowl Underliner
dia.15cm

GL32U
Finger Bowl Underliner
dia.14cm

Dim Sum Basket

DS8804 dia.10.8 X H5.5cm Inner: dia.10.5cm	DS8806 dia.16 X H6.8cm Inner: dia.15.7cm	DS88065 dia.17.5 X H7.5cm Inner: dia.17.1cm	DS8807 dia.18.6 X H7.5cm Inner: dia.18.3cm
DS8808 dia.20.9 X H6.7cm Inner: dia.20.6cm	DS8809 dia.24 X H6.9cm Inner: dia.23.7cm	DS8810 dia.26.4 X H17cm Inner: dia.26.1cm	

Dim Sum Basket

BF8804 dia.10.8 X H5.5cm Inner: dia.10.5cm	BF8806 dia.16 X H6.8cm Inner: dia.15.7cm	BF88065 dia.17.5 X H7.5cm Inner: dia.17.1cm	BF8807 dia.18.6 X H7.5cm Inner: dia.18.3cm
BF8808 dia.20.9 X H6.7cm Inner: dia.20.6cm	BF8809 dia.24 X H6.9cm Inner: dia.23.7cm	BF8810 dia.26.4 X H7cm Inner: dia.26.1cm	

Luxury Amenities Box

DSB85 dia.10 X H7.5cm Inner: dia.8.5cm	DSB130 dia.14 X H7.5cm Inner: dia.12.8cm	DSB150 dia.16.5 X H7.5cm Inner: dia.15cm

NS901
Crab Plate
L15 x W14.8cm

S903
Crab Hammer
L9.1 x W4cm

LO09
Crab Cracker
L18.8cm

904BP
Crab Fork
L20.4cm

Kaika Hong Kong

Inakaya Shenzhen

JOB REFERENCE

WNK®
FIRST IN FOOD SERVICE

A	
Aloft Perth	Perth, Australia
Altira Hotel Macau	Macau
Anantara Sanya Resort & Spa	Sanya, China
Andaz Shenzhen Bay	Shenzhen,China
Andaz Xiamen	Xiamen, China
Angsana Danang	Danang, Vietnam
B	
Banyan Tree Lang Cô	Danang, Vietnam
Banyan Tree Kuala Lumpur	Kuala Lumpur, Malaysia
Beijing Marriott Hotel City Wall	Beijing, China
C	
City of Dreams Macau	Macau
Conrad Makkah	Makkah, Saudi Arabia
Conrad Shenyang	Shenyang, China
Conrad Shenzhen	Shenzhen, China
Copthorne Hotel - Doha	Doha, Qatar
Crown Melbourne	Melbourne, Australia
Crowne Plaza Guangzhou City Centre	Guangzhou, China
Crowne Plaza Hotel Sun Palace Beijing	Beijing, China
Crowne Plaza New Delhi Okhla	New Delhi. India
Crowne Plaza Shenzhen	Shenzhen, China
Crowne Plaza Wuhu Hotel	Wuhu, China
Crowne Plaza Hong Kong, Causeway Bay	Hong Kong
Crowne Plaza Jeddah	Jeddah, Saudi Arabia
Crowne Plaza Kuwait City Hotels	Kuwait City, Kuwait
Crowne Plaza Yibin	Yibin, China
Crown Sydney	Sydney, Australia
D	
Dar Al Taqwa Madinah	Madinah, Saudi Arabia
Disney's Hollywood Hotel Hong Kong	Hong Kong
DoubleTree by Hilton Beijing	Beijing, China
E	
Elaf Al Mashaer Hotel Makkah	Makkah, Saudi Arabia
Elaf Jeddah Hotel	Jeddah, Saudi Arabia
F	
Fairmont Peace Hotel	Shanghai, China
Four Points by Sheraton Beijing, Haidian Hotel	Beijing, China
Four Seasons Hotel Doha	Doha, Qatar
Four Seasons Hotel Hong Kong	Hong Kong
Four Seasons Hotel Macao	Macau
Four Seasons Hotel Shanghai	Shanghai, China
Four Seasons Hotel Sydney	Sydney, Australia
Four Seasons Hotel Tianjin	Tianjin, China
G	
Galaxy Macau	Macau
Golden Sun Villa Hotel	Hanoi, Vietnam
Grand Emperor Hotel	Macau
Grand Hyatt Cannes Hôtel Martinez	France
Grand Hyatt Chengdu	Chengdu, China
Grand Hyatt Dalian	Dalian, China
Grand Hyatt Jeju	Jeju-do, South Korea
Grand Hyatt Macau	Macau
Grand Hyatt Manila	Manila, Philippines
Grand Hyatt Sanya Haitang Bay Resort And Spa	Sanya, China
Grand Hyatt Taipei	Taipei, Taiwan
Grand Lisboa Hotel Macau	Macau
H	
Habour Plaza Metropolis	Hong Kong
Harbour Grand Hotel Hong Kong	Hong Kong
Harbour Plaza Resort City Hong Kong	Hong Kong
Harbour View Place Hotel Hong Kong	Hong Kong
Hilton Colon Guayaquil	Guayaquil, Ecuador
Hilton Garden Inn Lucknow	Lucknow, India
Hilton Hanoi Opera	Hanoi, Vietnam
Hilton Jeddah	Jeddah, Saudi Arabia
Holiday Inn Dresden	Dresden, Germany
Holiday Inn New Delhi Int'l Airport	New Delhi, India
Hong Kong Disneyland Hotel	Hong Kong
Hong Kong Jockey Club	Hong Kong
Hong Kong Skycity Marriott Hotel	Hong Kong
Hotel Nikko Saigon	Saigon, Vietnam
Hotel Sofitel Wanda Beijing	Beijing, China
Hyatt Regency Ahmedabad	Ahmedabad, India
Hyatt Regency Changchun	Changchun, China
Hyatt Regency Guiyang Hyatt Regency	Guiyang, China
Kathmandu	Kathmandu, Nepal
Hyatt Regency Hong Kong, Sha Tin	Hong Kong
Hyatt Regency Hengqin	Zhuhai, China
Hyatt Regency Seragaki Island Okinawa	Okinawa, Japan
Hyatt Regency Suzhou	Suzhou, China
I	
InterContinental Jakarta Pondok indah	Jakarta, Indonesia
InterContinental Dar Ai Tawhid Makkah	Makkah, Saudi Arabia
InterContinental Perth City Centre	Perth, Australia
Island Shangri-La, Hong Kong	Hong Kong
J	
J Hotel Shanghai Tower	Shanghai, China
JW Marriott Hotel Pune	Pune, India
JW Marriott Hangzhou Hotel	Hangzhou, China
JW Marriott Shanghai Hotel	Shanghai, China
JW Marriott Shenzhen Hotel	Shenzhen, China
K	
Kowloon Shangri-La, Hong Kong	Hong Kong
L	
Landmark Amman Hotel & Conference Center	Jordan
Langham Place, Guangzhou	Guangzhou, China
Le Royal Hotels & Resorts -Amman	Jordan
Lotte Hotel Hanoi	Hanoi, Vietnam
L'Arc Macau	Macau
M	
Macau Tower Convention and Entertainment Centre	Macau
Mandarin Oriental, Kuala Lumpur	Kuala Lumpur, Malaysia
Mandarin Oritenal, Hong Kong	Hong Kong
Marco Polo Parkside Hotel Beijing	Beijing, China
Marco Polo Hong Kong Hotel	Hong Kong
Marco Polo Prince Hotel	Hong Kong
Messilah Beach Hotel	Kuwait City, Kuwait
MGM Grand Sanya Hotel	Sanya, China
MGM Macau	Macau
Movenpick Bahrain	Al Muharraq, Bahrain
N	
Narcissus Hotel & Residence Riyadh	Riyadh, Saudi Arabia
Ningbo Marriott Hotel	Ningbo, China
Novotel Danang Premier	Danang, Vietnam
P	
Pan Pacific Yangon	Yangon, Myanmar
Park Hyatt Changbaishan	Changbaishan, China
Park Hyatt Hangzhou	Hangzhou, China
Park Hyatt Ningbo Resort and Spa Hotel	Ningbo, China
Park Hyatt Saigon	Saigon, Vietnam
Park Hyatt Sanya Sunny Bay Resort	Sanya, China
Park Hyatt Shenzhen	Shenzhen, China
Park Hyatt Siem Reap	Kingdom of Cambodia
PARKROYAL Nay Pyi Taw	Myanmar
Portman Ritz-Carlton Hotel	Shanghai, China
Pullman Beijing West Wanda Hotel	Beijing, China
Pullman Guangzhou Baiyun Airport	Guangzhou, China
Pullman ZamZam Makkah	Makkah, Saudi Arabia
R	
Regal Kowloon Hotel	Hong Kong
Regent Taipei	Taipei, Taiwan
Renaissance Harbour View Hotel	Hong Kong
Renaissance Hotel Suzhou	Suzhou, China
Renaissance Pattaya Resort & Spa	Pattaya, Thailand
Riyadh Marriott Hotel	Riyadh, Saudi Arabia
Rosewood Hong Kong	Hong Kong
Rosewood Guangzhou	Guangzhou, China
Royal Singi Hotel	Kathmandu, Nepal
S	
Safir Hotel - Doha - Qatar	Doha, Qatar
Sanctum Inle Resort	Myanmar
Sands Macao	Macau
Shanghai Marriott Hotel City Centre	Shanghai, China
Shangri-La Hotel, Baotou	Baotou, China
Shangri-La Hotel, Beijing	Beijing, China
Shangri-La Hotel, Changzhou	Changzhou, China
Shangri-La Hotel, Chengdu	Chengdu, China
Shangri-La Hotel, Dalian	Dalian, China
Shangri-La Hotel, Guangzhou	Guangzhou, China
Shangri-La Hotel, Ningbo	Ningbo, China
Shangri-La Hotel, Paris	Paris, France
Shangri-La Hotel, Toronoto	Toronoto, Canada
Sheraton Amman Al Nabil Hotel	Amman, Jordan
Sheraton Bail Kuta Resort	Bali Kuta, Bali
Sheraton Dammam Hotel & Convention Centre	Dammam, Saudi Arabia
Sheraton Daqing Hotel	Daqing, China
Sheraton Grand Danang Resort	Resort-danang, Vietnam
Sheraton Hanoi Hotel	Hanoi, Vietnam
Sheraton Hong Kong Hotel & Towers	Hong Kong
Sheraton Resort & Spa, Tokoriki Island, Fiji	Tokoriki Island, Fiji
Sheraton Urumqi Hotel	Urumqi, China
Sheraton Zhoushan Hotel	Zhoushan, China
Sofitel Al Khobar The Corniche	Alkhobar, Saudi Arabia
Sofitel Bangkok Sukhumvit	Bangkok, Thailand
Sofitel Legend Metropole Hanoi	Hanoi, Vietnam
StarWorld Hotel	Macau
Sule Shangri-La	Yangon, Myanmar
Sutera Harbour Resort	Sabah,Malaysia
Symphony Style Hotel	Kuwait Salmiya, Kuwait
T	
The Kowloon Hotel	Hong Kong
The Londoner Macao	Macau
The Mira Hong Kong	Hong Kong
The Park Lane Hong Kong a Pullman Hotel	Hong Kong
The Peninsula Bangkok	Bangkok, Thailand
The Peninsula Chicago	Chicago, USA
The Peninsula Hong Kong	Hong Kong
The Peninsula New York	New York, USA
The Peninsula Paris	Paris, France
The Peninsula Shanghai	Shanghai, China
The Ritz-Carlton, Bahrain	Manama, Bahrain
The Ritz Carlton, Guangzhou	Guangzhou, China
The Ritz-Carlton, Hong Kong	Hong Kong
The Ritz-Carlton Shanghai, Pudong	Shanghai, China
The Ritz-Carlton, Shenzhen	Shenzhen, China
The Royal Garden	Hong Kong
The St. Regis Bangkok	Bangkok, Thailand
The Westin Guangzhou	Guangzhou, China
The Westin Tokyo	Tokyo, Japan
V	
Venetian Cotai Macao	Macau
W	
W Doha Hotel & Residences	Doha, Qatar
W Hong Kong	Hong Kong
Widus Hotel and Casino	Pampanga, Philippines
Wyndham Grand Regency Doha	Doha, Qatar
Wynn Hotel Macau	Macau

WNK®

FIRST IN FOOD SERVICE

Head Office

Unit B, 6/F, Dragon Industrial Building,

No.93 King Lam Street,Lai Chi Kok, Kowloon, Hong Kong

Tel: (852) 2735 8671 / 2735 0532

FAX: (852) 2314 2932 / 2730 8514

Email: info@wnk-hk.com

wnk-hk.com